1. ALL RESISTANCE VALUES ARE IN OHMS, 0.1 WATT +/- 5%.
2. ALL CAPACITANCE VALUES ARE IN MICROFARADS.
3. ALL CRYSTALS & OSCILLATOR VALUES ARE IN HERTZ.

REV	ECN	DESCRIPTION OF REVISION	APPD / DATE
8	0006400877	ENGINEERING RELEASED	2016-06-14

D10 MLB - DVT

LAST_MODIFICATION=Tue Jun 14 15:20:28 2016

PAGE	<CSA>	CONTENTS	SYNC	DATE
1	<CSA_PAGE1>	TABLE OF CONTENTS	<SYNC_MASTER1>	<SYNC_DATE1>
2	<CSA_PAGE2>	SYSTEM:BOM TABLES	<SYNC_MASTER2>	<SYNC_DATE2>
3	<CSA_PAGE3>	MLB SPECIFIC: BOM TABLE	<SYNC_MASTER3>	<SYNC_DATE3>
4	<CSA_PAGE4>	SYSTEM:MECHANICAL, TESTPOINTS	<SYNC_MASTER4>	<SYNC_DATE4>
5	<CSA_PAGE5>	SYSTEM:BOARDID	<SYNC_MASTER5>	<SYNC_DATE5>
6	<CSA_PAGE6>	spare	<SYNC_MASTER6>	<SYNC_DATE6>
7	<CSA_PAGE7>	SOC:JTAG,USB,XTAL	<SYNC_MASTER7>	<SYNC_DATE7>
8	<CSA_PAGE8>	SOC:PCIE	<SYNC_MASTER8>	<SYNC_DATE8>
9	<CSA_PAGE9>	SOC:MIPI AND ISP	<SYNC_MASTER9>	<SYNC_DATE9>
10	<CSA_PAGE10>	SOC:LPDP	<SYNC_MASTER10>	<SYNC_DATE10>
11	<CSA_PAGE11>	SOC:SERIAL	<SYNC_MASTER11>	<SYNC_DATE11>
12	<CSA_PAGE12>	SOC:GPIO & UART	<SYNC_MASTER12>	<SYNC_DATE12>
13	<CSA_PAGE13>	SOC:AOP	<SYNC_MASTER13>	<SYNC_DATE13>
14	<CSA_PAGE14>	SOC:POWER (1/3)	<SYNC_MASTER14>	<SYNC_DATE14>
15	<CSA_PAGE15>	SOC:POWER (2/3)	<SYNC_MASTER15>	<SYNC_DATE15>
16	<CSA_PAGE16>	SOC:POWER (3/3)	<SYNC_MASTER16>	<SYNC_DATE16>
17	<CSA_PAGE17>	NAND	<SYNC_MASTER17>	<SYNC_DATE17>
18	<CSA_PAGE18>	SYSTEM POWER:PMU (1/3)	<SYNC_MASTER18>	<SYNC_DATE18>
19	<CSA_PAGE19>	SYSTEM POWER:PMU (2/3)	<SYNC_MASTER19>	<SYNC_DATE19>
20	<CSA_PAGE20>	SYSTEM POWER:PMU (3/3)	<SYNC_MASTER20>	<SYNC_DATE20>
21	<CSA_PAGE21>	SYSTEM POWER:CHARGER	<SYNC_MASTER21>	<SYNC_DATE21>
22	<CSA_PAGE22>	SYSTEM POWER:BATTERY CONN	<SYNC_MASTER22>	<SYNC_DATE22>
23	<CSA_PAGE23>	SYSTEM POWER:BOOST	<SYNC_MASTER23>	<SYNC_DATE23>
24	<CSA_PAGE24>	SENSORS	<SYNC_MASTER24>	<SYNC_DATE24>
25	<CSA_PAGE25>	B2B FILTERS: UTAH	<SYNC_MASTER25>	<SYNC_DATE25>
26	<CSA_PAGE26>	CAMERA:STROBE DRIVER	<SYNC_MASTER26>	<SYNC_DATE26>
27	<CSA_PAGE27>	Accessory: Buck Circuit	<SYNC_MASTER27>	<SYNC_DATE27>
28	<CSA_PAGE28>	TRINITY: FF SPECIFIC	<SYNC_MASTER28>	<SYNC_DATE28>
29	<CSA_PAGE29>	B2B:FOREHEAD	<SYNC_MASTER29>	<SYNC_DATE29>
30	<CSA_PAGE30>	spare	<SYNC_MASTER30>	<SYNC_DATE30>
31	<CSA_PAGE31>	AUDIO:CALTRA CODEC (1/2)	<SYNC_MASTER31>	<SYNC_DATE31>
32	<CSA_PAGE32>	AUDIO:CALTRA CODEC (2/2)	<SYNC_MASTER32>	<SYNC_DATE32>
33	<CSA_PAGE33>	AUDIO:SPEAKER AMP 2	<SYNC_MASTER33>	<SYNC_DATE33>
34	<CSA_PAGE34>	AUDIO:SPEAKER AMP 1	<SYNC_MASTER34>	<SYNC_DATE34>
35	<CSA_PAGE35>	ARC:DRIVER	<SYNC_MASTER35>	<SYNC_DATE35>
36	<CSA_PAGE36>	ARC:MAGGIE	<SYNC_MASTER36>	<SYNC_DATE36>
37	<CSA_PAGE37>	DISPLAY & MESA:POWER	<SYNC_MASTER37>	<SYNC_DATE37>
38	<CSA_PAGE38>	B2B:ORB & MESA	<SYNC_MASTER38>	<SYNC_DATE38>
39	<CSA_PAGE39>	B2B FILTERS: DISPLAY & TOUCH	<SYNC_MASTER39>	<SYNC_DATE39>
40	<CSA_PAGE40>	TRISTAR 2	<SYNC_MASTER40>	<SYNC_DATE40>
41	<CSA_PAGE41>	B2B:DOCK FLEX	<SYNC_MASTER41>	<SYNC_DATE41>
42	<CSA_PAGE42>	spare	<SYNC_MASTER42>	<SYNC_DATE42>
43	<CSA_PAGE43>	spare	<SYNC_MASTER43>	<SYNC_DATE43>
44	<CSA_PAGE44>	B2B FILTERS: RIGHT BUTTON FLEX	<SYNC_MASTER44>	<SYNC_DATE44>
45	<CSA_PAGE45>	B2B: SMALL FF SPECIFIC	<SYNC_MASTER45>	<SYNC_DATE45>
46	<CSA_PAGE46>	SMALL FORM FACTOR SPECIFIC	<SYNC_MASTER46>	<SYNC_DATE46>
47	<CSA_PAGE47>	I2C MAP: AP, TOUCH, HOMER, I2C5	<SYNC_MASTER47>	<SYNC_DATE47>
48	<CSA_PAGE48>	I2C MAP AOP	<SYNC_MASTER48>	<SYNC_DATE48>
49	<CSA_PAGE49>	I2C TABLE	<SYNC_MASTER49>	<SYNC_DATE49>
50	<CSA_PAGE50>	spare	<SYNC_MASTER50>	<SYNC_DATE50>
51	<CSA_PAGE51>	spare	<SYNC_MASTER51>	<SYNC_DATE51>
52	<CSA_PAGE52>	MLB UNIQUE	<SYNC_MASTER52>	<SYNC_DATE52>
53	<CSA_PAGE53>	CELL,WIFI,NFC	<SYNC_MASTER53>	<SYNC_DATE53>
54	<CSA_PAGE54>	WIFI_MLB SCHEMATIC	<SYNC_MASTER54>	<SYNC_DATE54>
55	<CSA_PAGE55>	PERENNIAL	<SYNC_MASTER55>	<SYNC_DATE55>
56	<CSA_PAGE56>	WIFI FRONT-END [77]	<SYNC_MASTER56>	<SYNC_DATE56>
57	<CSA_PAGE57>	page1	<SYNC_MASTER57>	<SYNC_DATE57>
58	<CSA_PAGE58>	NFC	<SYNC_MASTER58>	<SYNC_DATE58>
59	<CSA_PAGE59>	page1 [1]	<SYNC_MASTER59>	<SYNC_DATE59>
60	<CSA_PAGE60>	UAT MATCH AND TUNER CONNECTOR [2]	<SYNC_MASTER60>	<SYNC_DATE60>
61	<CSA_PAGE61>	BOM LIST	<SYNC_MASTER61>	<SYNC_DATE61>
62	<CSA_PAGE62>	page1	<SYNC_MASTER62>	<SYNC_DATE62>
63	<CSA_PAGE63>	BOM_OMIT_TABLE	<SYNC_MASTER63>	<SYNC_DATE63>
64	<CSA_PAGE64>	PMU: CONTROL AND CLOCKS	<SYNC_MASTER64>	<SYNC_DATE64>
65	<CSA_PAGE65>	PMU: SWITCHERS AND LDOS	<SYNC_MASTER65>	<SYNC_DATE65>
66	<CSA_PAGE66>	BASEBAND: POWER2	<SYNC_MASTER66>	<SYNC_DATE66>
67	<CSA_PAGE67>	BASEBAND: CONTROL	<SYNC_MASTER67>	<SYNC_DATE67>
68	<CSA_PAGE68>	BASEBAND GPIOS	<SYNC_MASTER68>	<SYNC_DATE68>
69	<CSA_PAGE69>	TRANSCEIVER0/1: POWER	<SYNC_MASTER69>	<SYNC_DATE69>
70	<CSA_PAGE70>	TRANSCEIVER0/1: TX PORTS	<SYNC_MASTER70>	<SYNC_DATE70>
71	<CSA_PAGE71>	TRANSCEIVER0/1: PRX PORTS	<SYNC_MASTER71>	<SYNC_DATE71>
72	<CSA_PAGE72>	RECEIVE MATCHING	<SYNC_MASTER72>	<SYNC_DATE72>
73	<CSA_PAGE73>	LOWER ANTENNA & COUPLERS	<SYNC_MASTER73>	<SYNC_DATE73>
74	<CSA_PAGE74>	DIVERSITY RECEIVE ASM'S	<SYNC_MASTER74>	<SYNC_DATE74>
75	<CSA_PAGE75>	DIVERSITY RECEIVE LNA'S	<SYNC_MASTER75>	<SYNC_DATE75>
76	<CSA_PAGE76>	UPPER ANTENNA FEEDS	<SYNC_MASTER76>	<SYNC_DATE76>
77	<CSA_PAGE77>	PMU: ET MODULATOR	<SYNC_MASTER77>	<SYNC_DATE77>
78	<CSA_PAGE78>	TEST POINTS & BOOT CONFIG	<SYNC_MASTER78>	<SYNC_DATE78>
79	<CSA_PAGE79>	TDD TRANSMIT	<SYNC_MASTER79>	<SYNC_DATE79>
80	<CSA_PAGE80>	FDD TRANSMIT	<SYNC_MASTER80>	<SYNC_DATE80>
81	<CSA_PAGE81>	ICEFALL, SIM, DEBUG_CONN	<SYNC_MASTER81>	<SYNC_DATE81>
	<CSA_PAGE82>		<SYNC_MASTER82>	<SYNC_DATE82>
	<CSA_PAGE83>		<SYNC_MASTER83>	<SYNC_DATE83>
	<CSA_PAGE84>		<SYNC_MASTER84>	<SYNC_DATE84>
	<CSA_PAGE85>		<SYNC_MASTER85>	<SYNC_DATE85>
	<CSA_PAGE86>		<SYNC_MASTER86>	<SYNC_DATE86>
	<CSA_PAGE87>		<SYNC_MASTER87>	<SYNC_DATE87>
	<CSA_PAGE88>		<SYNC_MASTER88>	<SYNC_DATE88>
	<CSA_PAGE89>		<SYNC_MASTER89>	<SYNC_DATE89>
	<CSA_PAGE90>		<SYNC_MASTER90>	<SYNC_DATE90>

TABLE OF CONTENTS

Schematic & PCB Callouts

PART#	QTY	DESCRIPTION	REFERENCE DESIGNATOR(S)	CRITICAL	BOM OPTION
051-00419	1	SCH,MLB,D10	SCH	CRITICAL	?
820-00188	1	PCBF,MLB,D10	PCB	CRITICAL	?

System Block Diagram:

<rdar://problem/16684269>

SCH 051-00419
BRD 820-00188
MCO 056-01342

TABLE OF CONTENTS

PAGE TITLE: spare

DRAWING NUMBER: 051-00419 SIZE: D
REVISION: 8.0.0
BRANCH:
PAGE: 6 OF 53
SHEET: 6 OF 81

迅维手机维修培训学校 www.xinxunwei.com 4008009990

NAND BOM Options

PART#	QTY	DESCRIPTION	REFERENCE DESIGNATOR(S)	CRITICAL	BOM OPTION
335S00169	1	NAND,H,32GB,16nm,MLC	U1701	CRITICAL	NAND_32G
335S00182	1	NAND,H,128GB,16nm,TLC	U1701	CRITICAL	NAND_128G
335S00156	1	NAND,H,256GB,3Dv3,TLC	U1701	CRITICAL	NAND_256G
138S0867	5	CAP,X5R,100UF,20%,6.3V,0.65MM,HRETL,0402	C1748,C1713,C1716,C1721,C1733	CRITICAL	NAND_32G
138S00003	5	CAP,X5R,15UF,20%,,6.3V,0.65MM,HRETL,0402	C1748,C1713,C1716,C1721,C1733	CRITICAL	NAND_128G
138S00003	5	CAP,X5R,15UF,20%,,6.3V,0.65MM,HRETL,0402	C1748,C1713,C1716,C1721,C1733	CRITICAL	NAND_256G

PART NUMBER	ALTERNATE FOR PART NUMBER	BOM OPTION	REF DES	COMMENTS:
335S00201	335S00169	ALTERNATE	U1701	T,15nm,MLC,32GB
335S00209	335S00169	ALTERNATE	U1701	S,16nm,MLC,32GB
335S00195	335S00182	ALTERNATE	U1701	SS,1Ynm,TLC,128GB
335S00180	335S00182	ALTERNATE	U1701	T,15nm,TLC,128GB
335S00179	335S00182	ALTERNATE	U1701	SD,15nm,TLC,128GB
335S00148	335S00183	ALTERNATE	U1701	SD,3Dv2,TLC,256GB
335S00190	335S00183	ALTERNATE	U1701	SS,3Dv3,TLC,256GB

#22686038:See Radar

Magnesium Alternates

PART NUMBER	ALTERNATE FOR PART NUMBER	BOM OPTION	REF DES	COMMENTS:
338S00173	338S00203	ALTERNATE	U2402	Larger Wafer (~29 flim) Magnesium

Carbon Alternates

PART NUMBER	ALTERNATE FOR PART NUMBER	BOM OPTION	REF DES	COMMENTS:
338S00087	338S00226	ALTERNATE	U2401,U2404	Updated version of Carbon

UT LDO Alternates

PART NUMBER	ALTERNATE FOR PART NUMBER	BOM OPTION	REF DES	COMMENTS:
353S00889	353S00015	ALTERNATE	U2501	HT, LDO REG, 2.925V, CSP 0.45x0.45

Mamba LDO Alternates

PART NUMBER	ALTERNATE FOR PART NUMBER	BOM OPTION	REF DES	COMMENTS:
353S00932	353S00576	ALTERNATE	U3801	HT, LDO REG, 2.75V

I2C5 Alternate

PART NUMBER	ALTERNATE FOR PART NUMBER	BOM OPTION	REF DES	COMMENTS:
335S00234	335S00233	ALTERNATE	U1101	I2C5 ALTERNATE

Active Diode Alternate

PART NUMBER	ALTERNATE FOR PART NUMBER	BOM OPTION	REF DES	COMMENTS:
376S00106	376S00047	ALTERNATE	Q2101	DIODES INC. ACT DIODE

DDR PLL Alternate

PART NUMBER	ALTERNATE FOR PART NUMBER	BOM OPTION	REF DES	COMMENTS:
155S00095	155S00068	ALTERNATE	FL1501	FERR BD,1000OHM,25%,100MA,200OHM,01005

Power Inductor Alternates

PART NUMBER	ALTERNATE FOR PART NUMBER	BOM OPTION	REF DES	COMMENTS:	
152S00118	152S00075	ALTERNATE	ALL	IND,PWR,0802,1.2 UH,1.0A,0.080 OHM,2016	
152S00077	152S00397	ALTERNATE	ALL	IND,PWR,0802,1.0 UH,2.25A,0.150 OHM,2016	updated 11/12
152S00121	152S00081	ALTERNATE	ALL	IND,PWR,0802,0.47 UH,3.8A,0.048 OHM,2012	
152S00123	152S1936	ALTERNATE	ALL	IND,PWR,0802,15 UH,0.72A,0.900 OHM,3225	
152S00402	152S00366	ALTERNATE	ALL	IND,MULT,10H,1.2A,0.320 OHM,0603	updated 11/12
152S00297	152S1843	ALTERNATE	ALL	CYSTEC 2012 10H	reverted 11/13
152S00365	152S00297	ALTERNATE	ALL	CYSTEC 2012 10H	
152S00398	152S00204	ALTERNATE	ALL	IND,PWR,0.22UH,20%,4.7A,23MOHM,2012	For Chestnut inductor; so it doesn't interfere with PMU inducotr Buck 7 alts
152S00120	152S00077	ALTERNATE	ALL	For Chestnut inductor only	Except BUCK5 LX (BUCK5 LX is Taiyo only)
152S00117	152S00074	ALTERNATE	ALL	IND,PWR,0802,1.0 UH,3.5A,0.060 OHM,2016	

Global R/C Alternates

PART NUMBER	ALTERNATE FOR PART NUMBER	BOM OPTION	REF DES	COMMENTS:
118S0764	118S0717	ALTERNATE	ALL	RES, 3.92K, 0.1W, 0201
138S0702	138S0657	ALTERNATE	ALL	CAP, X5R, 4.3UF, 4V, 0610
138S00006	138S0835	ALTERNATE	ALL	CAP, 3-TERM, 4.3UF, 4V, 0402
138S00005	138S00003	ALTERNATE	ALL	CAP,X5R,15UF,6.3V,0.45MM,0402,TRCTD
138S00048	138S00003	ALTERNATE	ALL	CAP,X5R,15UF,6.3V,0.45MM,0402,HTOCERA
138S0648	138S0652	ALTERNATE	ALL	CAP,X5R,4.7UF,6.3V,0.45MM,0402,TRCTD
132S0400	132S0436	ALTERNATE	ALL	CAP,X5R,0.22UF,6.3V,01005,TDK
138S00024	138S0986	ALTERNATE	ALL	CAP,CER,3-TERM,7.5UF,20%,6V,0402,TRCTD/TDK
138S0706	138S0739	ALTERNATE	ALL	CAP,CER,10UF,20%,10V,X5R,0201,MURATA
138S0945	138S0739	ALTERNATE	ALL	CAP,CER,10UF,20%,10V,X5R,0201,HTOCERA
132S0436	132S0400	ALTERNATE	ALL	CAP,CER,X5R,0.22UF,20%,6.3V,20%

Global Ferrite Alternates

PART NUMBER	ALTERNATE FOR PART NUMBER	BOM OPTION	REF DES	COMMENTS:
155S00067	155S0581	ALTERNATE	ALL	FERR, 2400HM, 0.380HM DCR, 0201
155S0581	155S00067	ALTERNATE	ALL	FERR, 2400HM, 0.380HM DCR, 0201
155S00012	155S00168	ALTERNATE	ALL	FLTR, 65 OHM, 0605
155S00194	155S0610	ALTERNATE	ALL	FERR BD, 1500HM, TDK
155S00200	155S0610	ALTERNATE	ALL	FERR BD, 1500HM, TY
152S00489	152S00456	ALTERNATE	ALL	FERR BD, 0.470H, TY

Global Varistor Alternates

PART NUMBER	ALTERNATE FOR PART NUMBER	BOM OPTION	REF DES	COMMENTS:
377S0168	377S0140	ALTERNATE	ALL	VARISTOR, 6.8V, 1000F, 01005

ACC BUCK CIRCUIT Alternates

PART NUMBER	ALTERNATE FOR PART NUMBER	BOM OPTION	REF DES	COMMENTS:
371S00087	371S00064	ALTERNATE	D2700	DIODE,SHOTKY,30V,200MA,0201
152S00558	152S00557	ALTERNATE	L2700	IND,MLD,0.47UH,2.5A,80MOhm,1608
376S00166	376S00164	ALTERNATE	Q2700,Q2701	FET,12V,CSP4
353S01007	353S01039	ALTERNATE	U2710	IC,LOAD SWITCH,WLCSP4

PAGE TITLE
spare

DRAWING NUMBER 051-00419 SIZE D
REVISION 8.0.0
BRANCH
PAGE 6 OF 53
SHEET 6 OF 81

迅维手机维修培训学校 4008009990 www.xinxunwei.com

D10 EEEE CALLOUTS

PART#	QTY	DESCRIPTION	REFERENCE DESIGNATOR(S)	CRITICAL	BOM OPTION
825-6838	1	EEEE CODE FOR 639-01754	EEEE_GXD5	CRITICAL	EEEE_BEST
825-6838	1	EEEE CODE FOR 639-01755	EEEE_GXD6	CRITICAL	EEEE_SUPREME
825-6838	1	EEEE CODE FOR 639-01756	EEEE_GXD7	CRITICAL	EEEE_EXTREME
825-6838	1	EEEE CODE FOR 639-02372	EEEE_H6TF	CRITICAL	EEEE_BEST_ROW
825-6838	1	EEEE CODE FOR 639-02373	EEEE_H6TG	CRITICAL	EEEE_SUPREME_ROW
825-6838	1	EEEE CODE FOR 639-02374	EEEE_H6TH	CRITICAL	EEEE_EXTREME_ROW

CAYMAN DDR Alternates

PART NUMBER	ALTERNATE FOR PART NUMBER	BOM OPTION	REF DES	COMMENTS:
339S00254	339S00253	ALTERNATE	ALL	DDR-H, 2G, B1
339S00255	339S00253	ALTERNATE	ALL	DDR-S, 2G, B1

Cap 2.2UF Alternates

PART NUMBER	ALTERNATE FOR PART NUMBER	BOM OPTION	REF DES	COMMENTS:
138S00049	138S00032	ALTERNATE	(C2507,C2531)	CAP,CER,X5R,2.2UF,20%6.3V,20%, KYOCERA
138S0831	138S00032	ALTERNATE	ALL	CAP,CER,X5R,2.2UF,20%-6.3V,20%,MURATA

#25634778: Exclude Kyocera as 2.2UF alt at only C2507/C2531 REFDES (other refdes no impact)

D10x Specific BOM Callouts

PART#	QTY	DESCRIPTION	REFERENCE DESIGNATOR(S)	CRITICAL	BOM OPTION
152S00117	1	TAIYO,IND,PWR,SHLD,10H,3.6A,0.0600HM,2016	L1803	CRITICAL	B5LX_TAIYO
117S0156	2	RES,MF,1K OHM, 5%, 1/32W, 01005	R4808,R4809	CRITICAL	UTAH_C

#24681501

#24629229

迅维手机维修培训学校 4008009990 www.xinxunwei.com
www.chinafix.com

PAGE TITLE: spare

DRAWING NUMBER: 051-00419 SIZE: D

REVISION: 8.0.0

BRANCH:

PAGE: 6 OF 53

SHEET: 6 OF 81

Current as of D10 MCO 056-01342-78

Contained in radio_mlb pages

NORTH SCREW EXPOSED

C0413 100PF 5% 16V NP0-C0G 01005
C0414 56PF 5% 25V NP0-C0G-CERM 01005
C0415 18PF 2% 16V CERM 01005
C0416 4PF +/-0.1PF 16V NP0-C0G 01005

ZT0401 2.70R1.80-NSP — CHASSIS_GND_BS401
BS0402 STDOFF-2.56OD1.4ID-1.10H-SM — CHASSIS_GND_BS402
BS0403 STDOFF-2.56OD1.4ID.99H-SM — CHASSIS_GND_BS403

C0401 220PF 5% 10V C0G-CERM 01005
C0402 220PF 5% 10V C0G-CERM 01005
C0403 100PF 5% 16V NP0-C0G 01005
C0404 56PF 5% 25V NP0-C0G-CERM 01005
C0405 18PF 2% 16V CERM 01005
C0406 4PF +/-0.1PF 16V NP0-C0G 01005

CHASSIS_GND_BS402

C0407 220PF 5% 10V C0G-CERM 01005
C0408 220PF 5% 10V C0G-CERM 01005
C0409 100PF 5% 16V NP0-C0G 01005
C0410 56PF 5% 25V NP0-C0G-CERM 01005
C0411 18PF 2% 16V CERM 01005
C0412 4PF +/-0.1PF 16V NP0-C0G 01005

CHASSIS_GND_BS403

C0417 220PF 5% 10V C0G-CERM 01005
C0418 220PF 5% 10V C0G-CERM 01005
C0419 100PF 5% 16V NP0-C0G 01005
C0420 56PF 5% 25V NP0-C0G-CERM 01005
C0421 18PF 2% 16V CERM 01005
C0422 4PF +/-0.1PF 16V NP0-C0G 01005

Back Shields

SH0400 SM — SHLD-EMI-UPPER-BK-D10

SH0402 SM — SHLD-EMI-LOWER-BK-D10

Front Shields

SH0401 SM — SHLD-EMI-UPPER-FRT-D10

SH0403 SM — SHLD-EMI-LOWER-FRT-D10

ZT0404 2.70R1.80-NSP

BS0405 STDOFF-2.56OD1.4ID.99H-SM

BS0406 STDOFF-2.90D1.9ID-0.85H-SM

CLIP-MLB-COAX-RETENTION-D10 — CL0401 SM-SP

TOP SIDE

TESTPOINTS

POWER

TP0420 TP-P55 ROOM=TEST — POWER GROUND

41 40 21 PP5V0_USB — TP0421 TP-P55 ROOM=TEST — VBUS

22 21 PP_BATT_VCC — TP0415 TP-P55 ROOM=TEST; TP0422 TP-P55 ROOM=TEST — VBATT

28 27 26 25 33 31 19 18 16 9 52 32 46 41 40 39 37 35 34 33 31 PP_VDD_MAIN — TP0408 TP-P55 ROOM=TEST; FD0408 FID 0P5SM1P0SQ-NSP ROOM=TEST — VDD_MAIN

Note: Fiducial used as test point

TP0419 TP-P55 ROOM=TEST
TP0424 TP-P55 ROOM=TEST
FD0400 FID 0P5SQ-SMP3SQ-NSP ROOM=TEST — GND TP

DFU

20 12 PMU_TO_AP_FORCE_DFU — TP0414 TP-P55 ROOM=TEST — FORCE DFU

E75

41 40 90_TRISTAR_DP1_CONN_P — TP0402 TP-P55 ROOM=TEST

41 40 90_TRISTAR_DP1_CONN_N — TP0403 TP-P55 ROOM=TEST

41 40 90_TRISTAR_DP2_CONN_P — TP0404 TP-P55 ROOM=TEST

41 40 90_TRISTAR_DP2_CONN_N — TP0405 TP-P55 ROOM=TEST

41 40 PP_TRISTAR_ACC1 — TP0406 TP-P55 ROOM=TEST

41 40 PP_TRISTAR_ACC2 — TP0407 TP-P55 ROOM=TEST

ACCESSORY ID AND POWER

TP0416 TP-P55 ROOM=TEST — TP IS TO HELP WITH USB SI IN THE FACTORY FIXTURE.

41 40 TRISTAR_CON_DETECT_L — TP0412 TP-P55 ROOM=TEST — FOR DIAGS

AMUX

20 PMU_AMUX_AY — TP0413 TP-P55 ROOM=TEST — ANALOG MUX A OUTPUT

R0413 200K 1% 1/32W MF 01005 ROOM=PMU — #25244799 100k to 200k

20 PMU_AMUX_BY — TP0423 TP-P55 ROOM=TEST — ANALOG MUX B OUTPUT

MOJAVE

38 37 MESA_TO_BOOST_EN — TP0400 TP-P55 ROOM=TEST

38 37 PP16V0_MESA — TP0401 TP-P55 ROOM=TEST

LCM

45 39 PP_LCM_BL_CAT1_CONN — TP0409 TP-P55 ROOM=TEST — LCM BACKLIGHT SINK1

45 39 PP_LCM_BL_CAT2_CONN — TP0410 TP-P55 ROOM=TEST — LCM BACKLIGHT SINK2

45 39 PP_LCM_BL_ANODE_CONN — TP0411 TP-P55 ROOM=TEST — LCM BACKLIGHT SOURCE

FIDUCIALS

FD0410 FID 0P5SM1P0SQ-NSP ROOM=ASSEMBLY
FD0409 FID 0P5SM1P0SQ-NSP ROOM=ASSEMBLY
FD0405 FID 0P5SM1P0SQ-NSP ROOM=ASSEMBLY
FD0406 FID 0P5SQ-SMP3SQ-NSP ROOM=ASSEMBLY
FD0404 FID 0P5SQ-SMP3SQ-NSP ROOM=ASSEMBLY
FD0403 FID 0P5SQ-SMP3SQ-NSP ROOM=ASSEMBLY
FD0402 FID 0P5SQ-SMP3SQ-NSP ROOM=ASSEMBLY
FD0407 FID 0P5SM1P0SQ-NSP ROOM=TEST

PAGE TITLE	spare
DRAWING NUMBER	051-00419
SIZE	D
REVISION	8.0.0
BRANCH	
PAGE	6 OF 53
SHEET	6 OF 81

迅维手机维修培训学校 www.xinxunwei.com 4008009990 www.chinafix.com

BOOTSTRAPPING:BOARD REV
BOARD ID
BOOT CONFIG

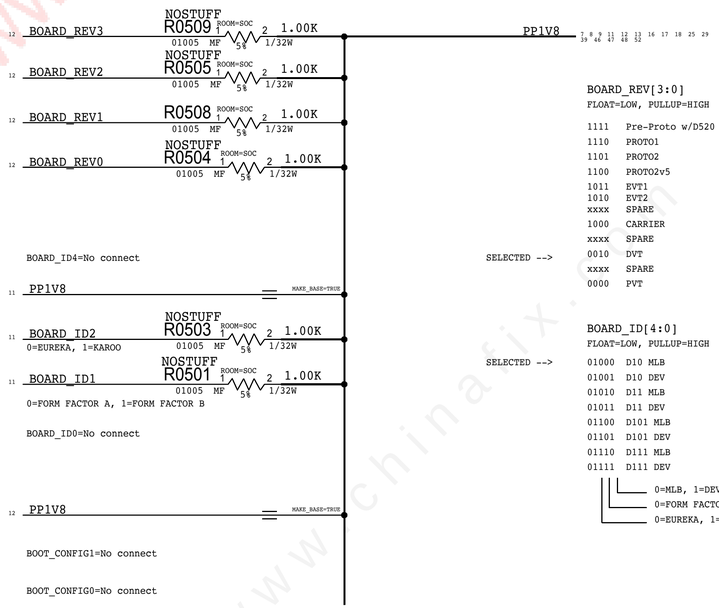

BOARD_REV[3:0]
FLOAT=LOW, PULLUP=HIGH

	1111	Pre-Proto w/D520 (non enclosure)
	1110	PROTO1
	1101	PROTO2
	1100	PROTO2v5
	1011	EVT1
	1010	EVT2
	xxxx	SPARE
	1000	CARRIER
	xxxx	SPARE
SELECTED -->	0010	DVT
	xxxx	SPARE
	0000	PVT

BOARD_ID[4:0]
FLOAT=LOW, PULLUP=HIGH

	01000	D10 MLB
	01001	D10 DEV
	01010	D11 MLB
	01011	D11 DEV
	01100	D101 MLB
	01101	D101 DEV
	01110	D111 MLB
SELECTED -->	01111	D111 DEV

0=MLB, 1=DEV
0=FORM FACTOR A, 1=FORM FACTOR B
0=EUREKA, 1=KAROO

BOOT_CONFIG[2:0]
FLOAT=LOW, PULLUP=HIGH

	000	SPI0
	001	SPI0 TEST MODE
	010	NVME0_X2
	011	NVME0 X2 TEST
SELECTED -->	100	NVME0 X1
	101	NVME0 X1 TEST
	110	SLOW SPI0 TEST
	111	FAST SPI0 TEST

PAGE TITLE	spare
DRAWING NUMBER	051-00419
SIZE	D
REVISION	8.0.0
BRANCH	
PAGE	6 OF 53
SHEET	6 OF 81

迅维手机维修培训学校 4008009990 www.xinxunwei.com
www.chinafix.com

迅维手机维修培训学校 4008009990 www.xinxunwei.com
www.chinafix.com
迅维手机维修培训学校 4008009990 www.xinxunwei.com

PAGE TITLE
spare

DRAWING NUMBER 051-00419	SIZE D
REVISION 8.0.0	
BRANCH	
PAGE 6 OF 53	
SHEET 6 OF 81	

SOC - USB, JTAG, XTAL

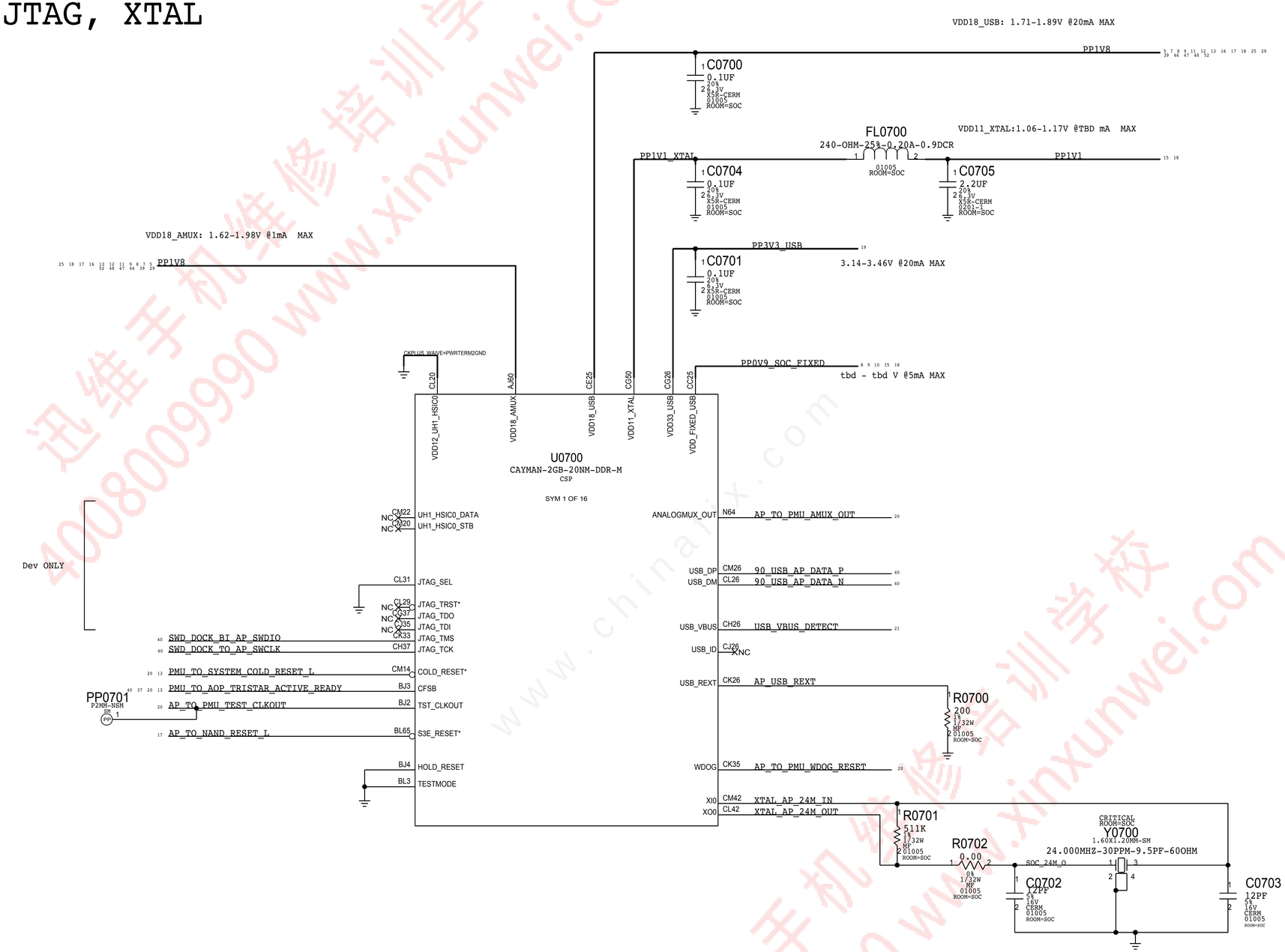

PAGE TITLE	spare
DRAWING NUMBER	051-00419
SIZE	D
REVISION	8.0.0
BRANCH	
PAGE	6 OF 53
SHEET	6 OF 81

迅维手机维修培训学校 4008009990 www.xinxunwei.com
www.chinafix.com

SOC - PCIE INTERFACES

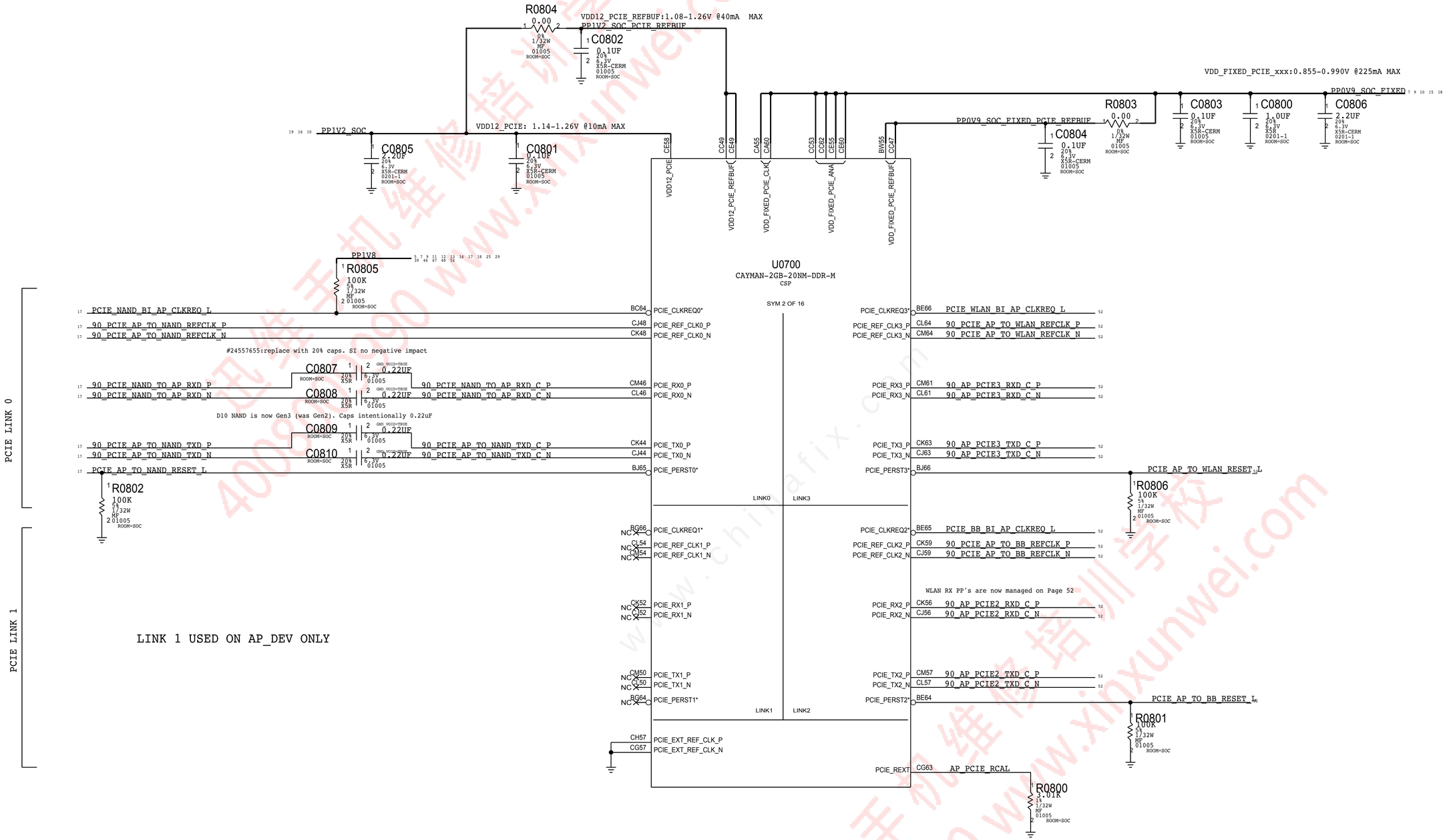

PAGE TITLE	spare
DRAWING NUMBER	051-00419
SIZE	D
REVISION	8.0.0
BRANCH	
PAGE	6 OF 53
SHEET	6 OF 81

迅维手机维修培训学校 www.xinxunwei.com 4008009990

SOC - MIPI & ISP INTERFACES

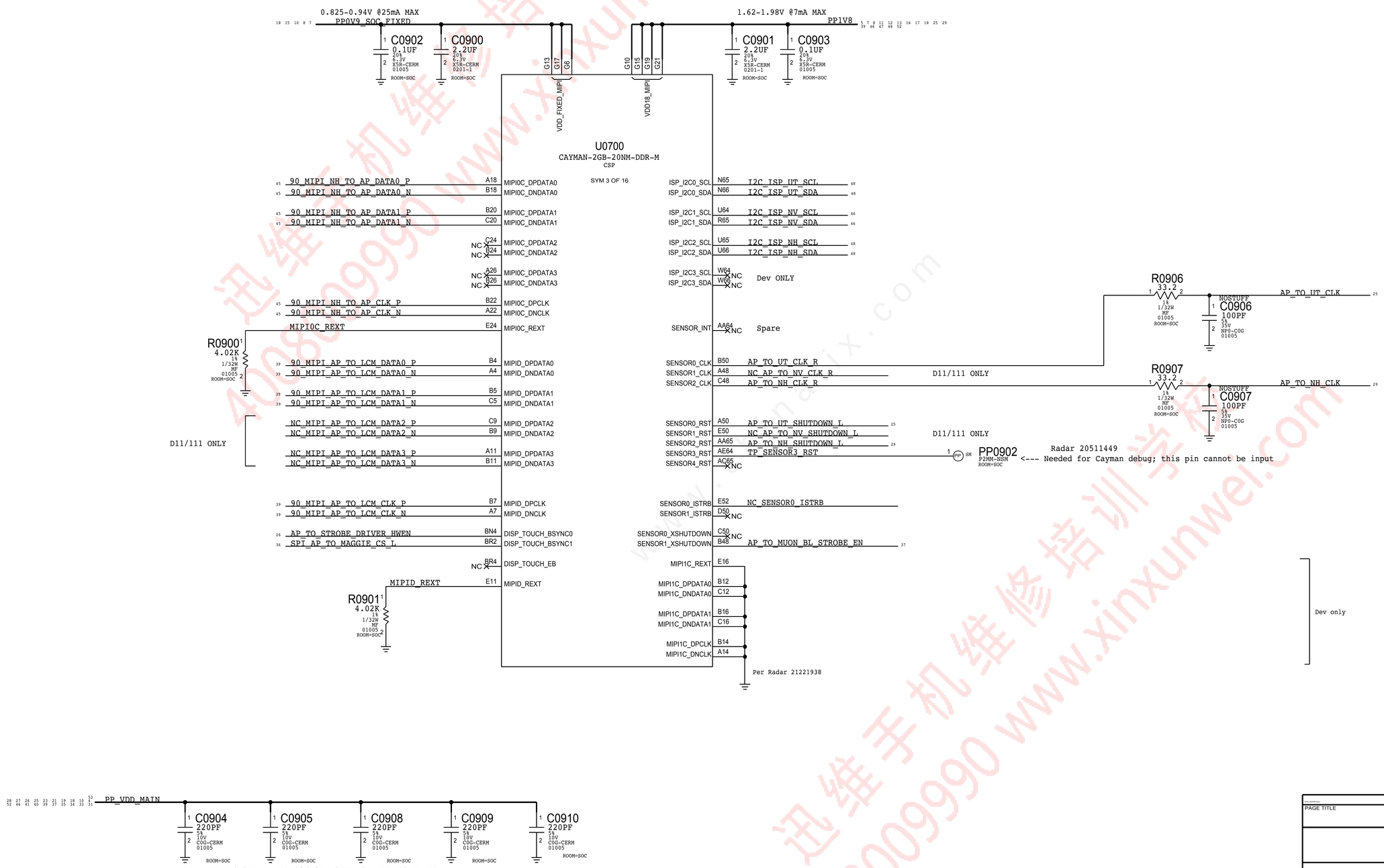

PAGE TITLE	spare
DRAWING NUMBER	051-00419
SIZE	D
REVISION	8.0.0
BRANCH	
PAGE	6 OF 53
SHEET	6 OF 81

迅维手机维修培训学校 www.xinxunwei.com 4008009990

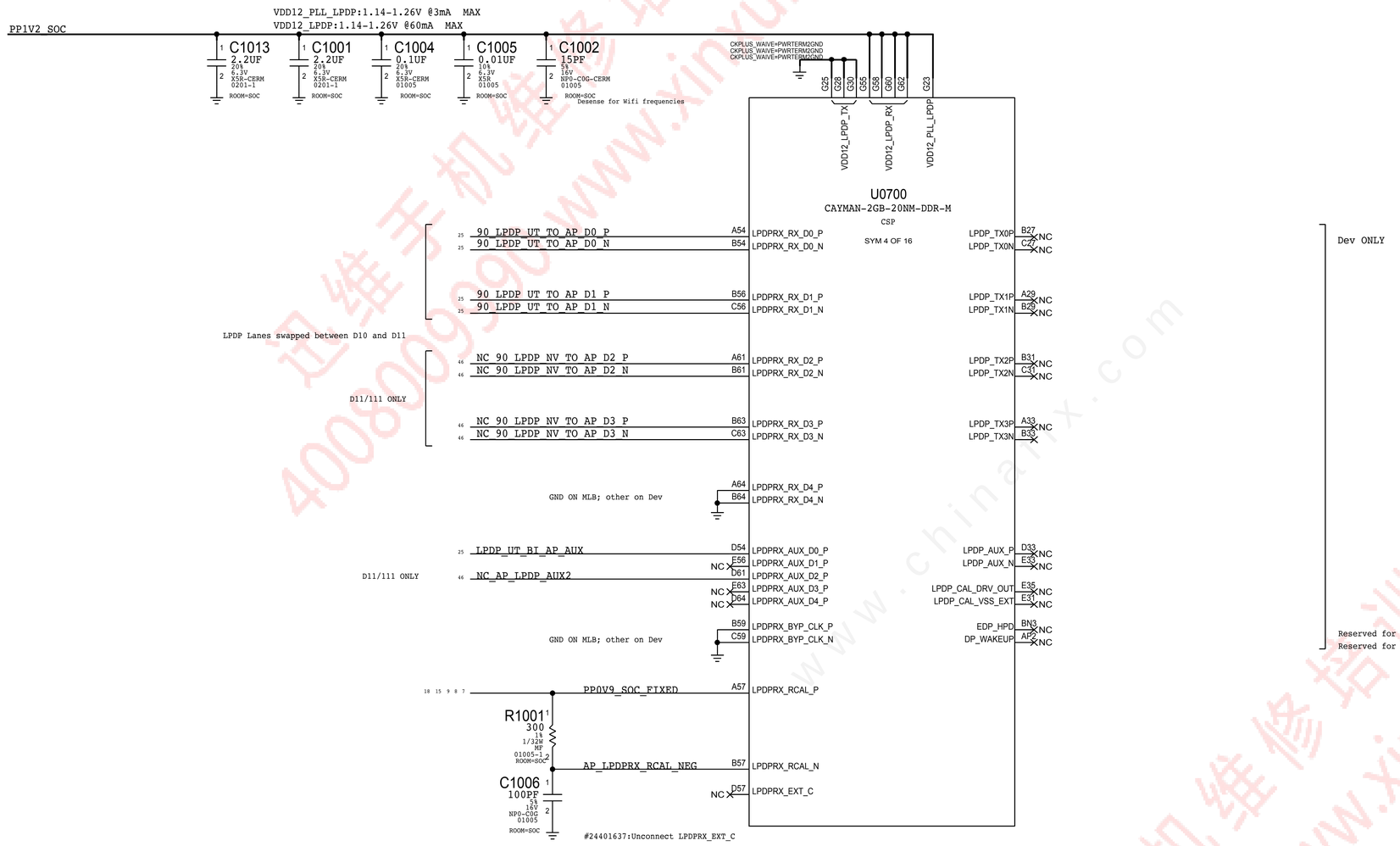

PAGE TITLE	spare
DRAWING NUMBER	051-00419
SIZE	D
REVISION	8.0.0
BRANCH	
PAGE	6 OF 53
SHEET	6 OF 81

迅维手机维修培训学校 www.xinxunwei.com 4008009990 www.chinafix.com

SOC - SERIAL INTERFACES

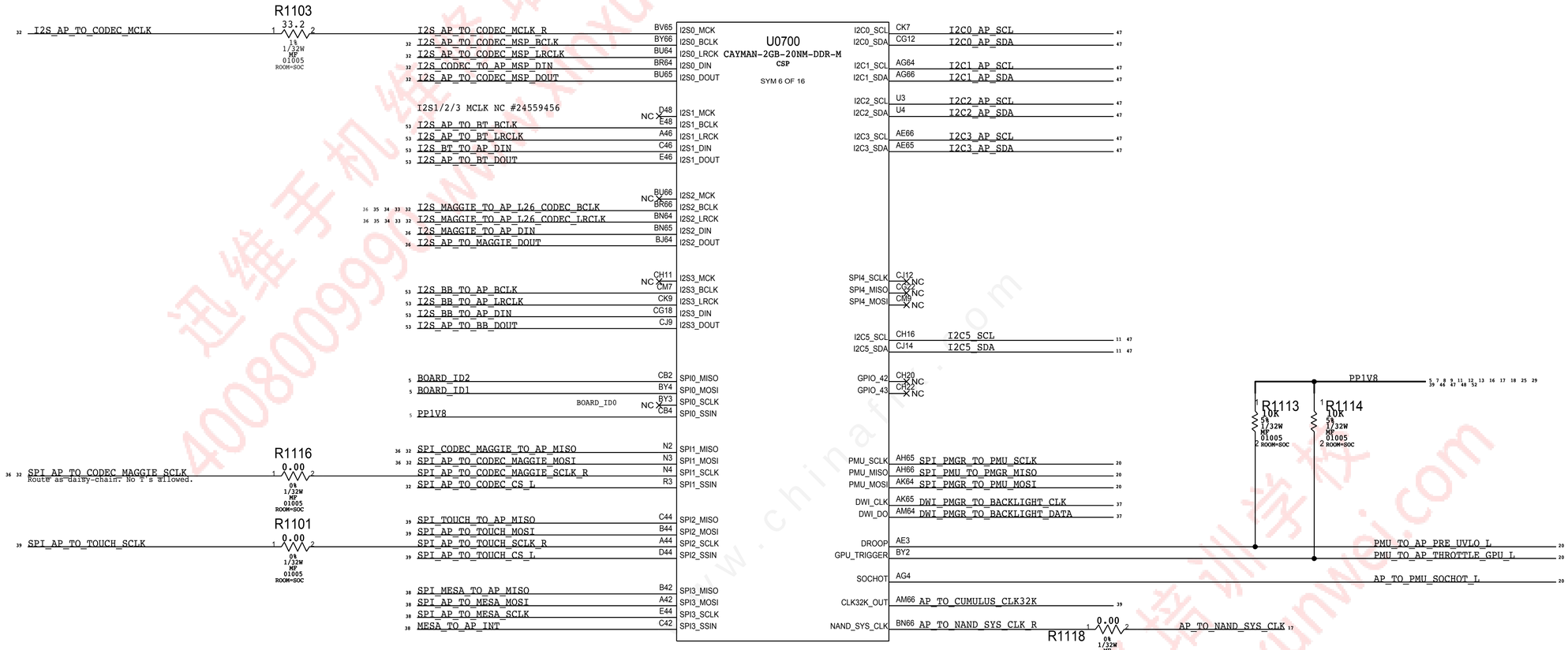

I2C5
See Radar#25316444 for Details

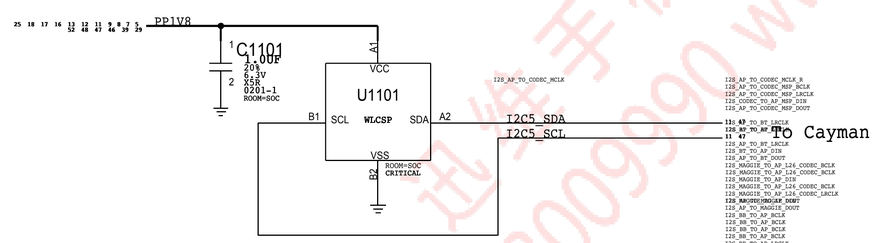

PAGE TITLE	spare
DRAWING NUMBER	051-00419
SIZE	D
REVISION	8.0.0
BRANCH	
PAGE	6 OF 53
SHEET	6 OF 81

迅维手机维修培训学校 www.xinxunwei.com 4008009990

SOC - GPIO INTERFACES

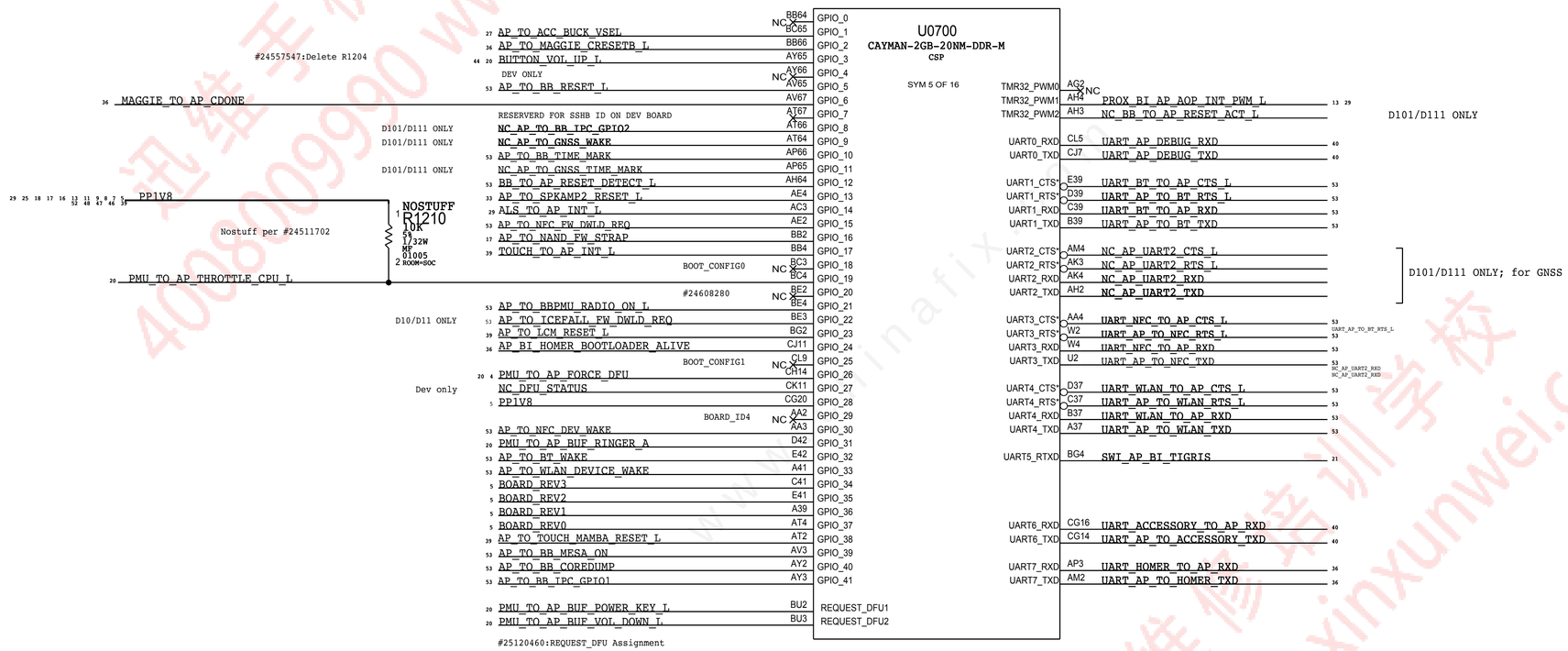

PAGE TITLE	spare
DRAWING NUMBER	051-00419
SIZE	D
REVISION	8.0.0
BRANCH	
PAGE	6 OF 53
SHEET	6 OF 81

迅维手机维修培训学校 4008009990 www.xinxunwei.com

SOC - AOP

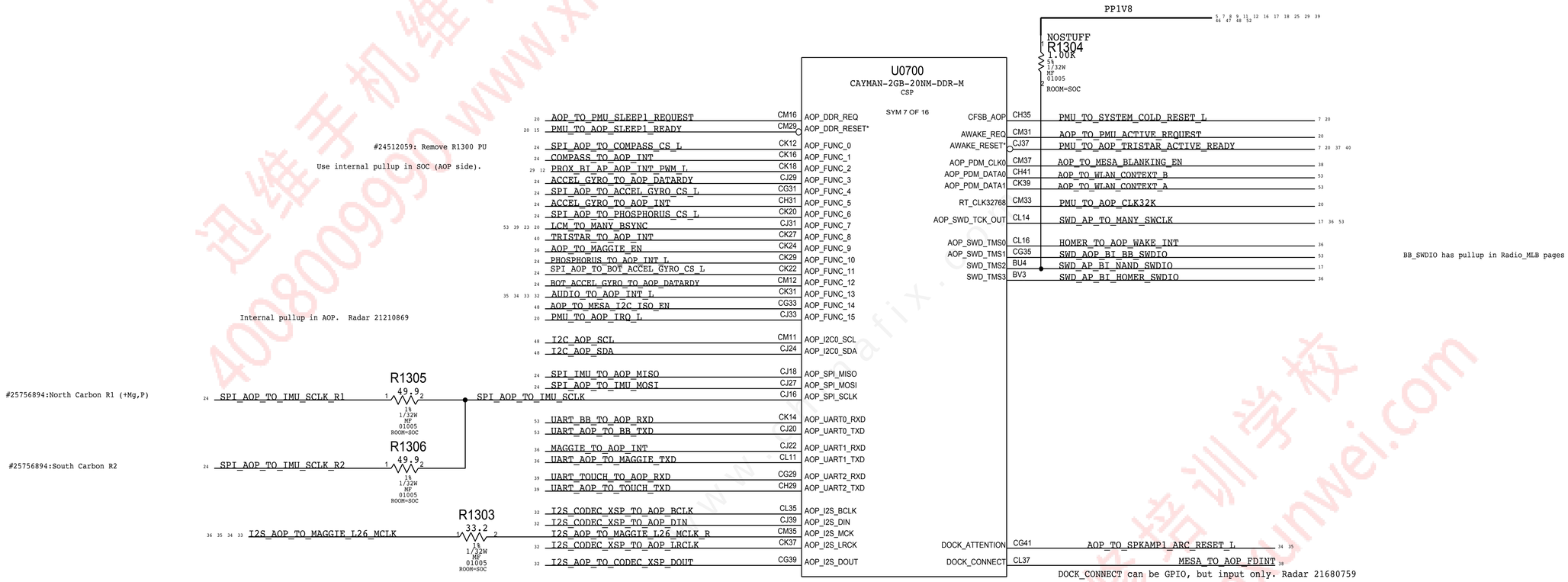

PAGE TITLE	spare
DRAWING NUMBER	051-00419
SIZE	D
REVISION	8.0.0
BRANCH	
PAGE	6 OF 53
SHEET	6 OF 81

迅维手机维修培训学校 4008009990 www.xinxunwei.com

SOC - CPU, GPU & SOC RAILS

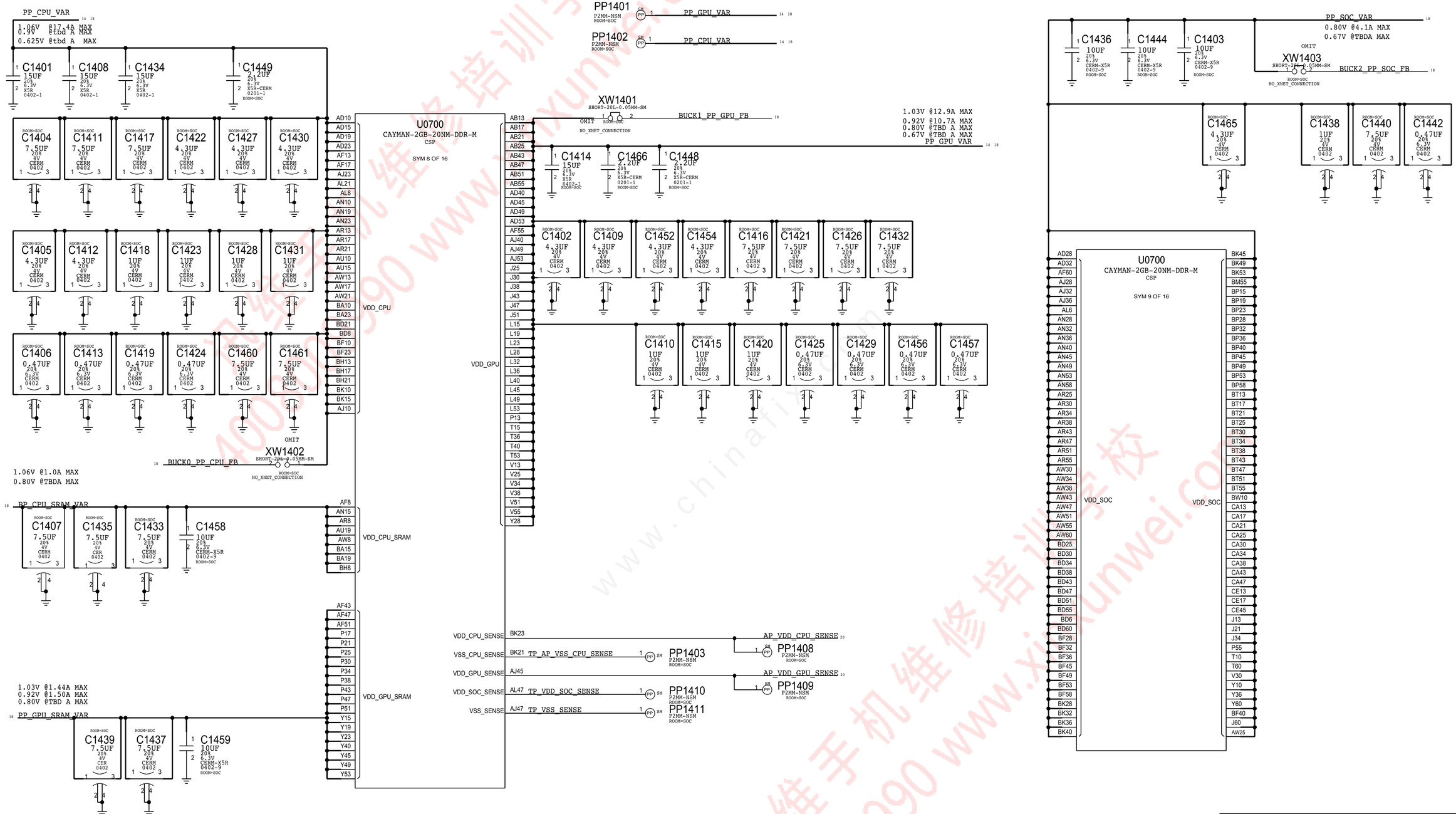

PAGE TITLE	spare
DRAWING NUMBER	051-00419
SIZE	D
REVISION	8.0.0
BRANCH	
PAGE	6 OF 53
SHEET	6 OF 81

迅维手机维修培训学校 4008009990 www.xunwei.com

SOC - POWER SUPPLIES

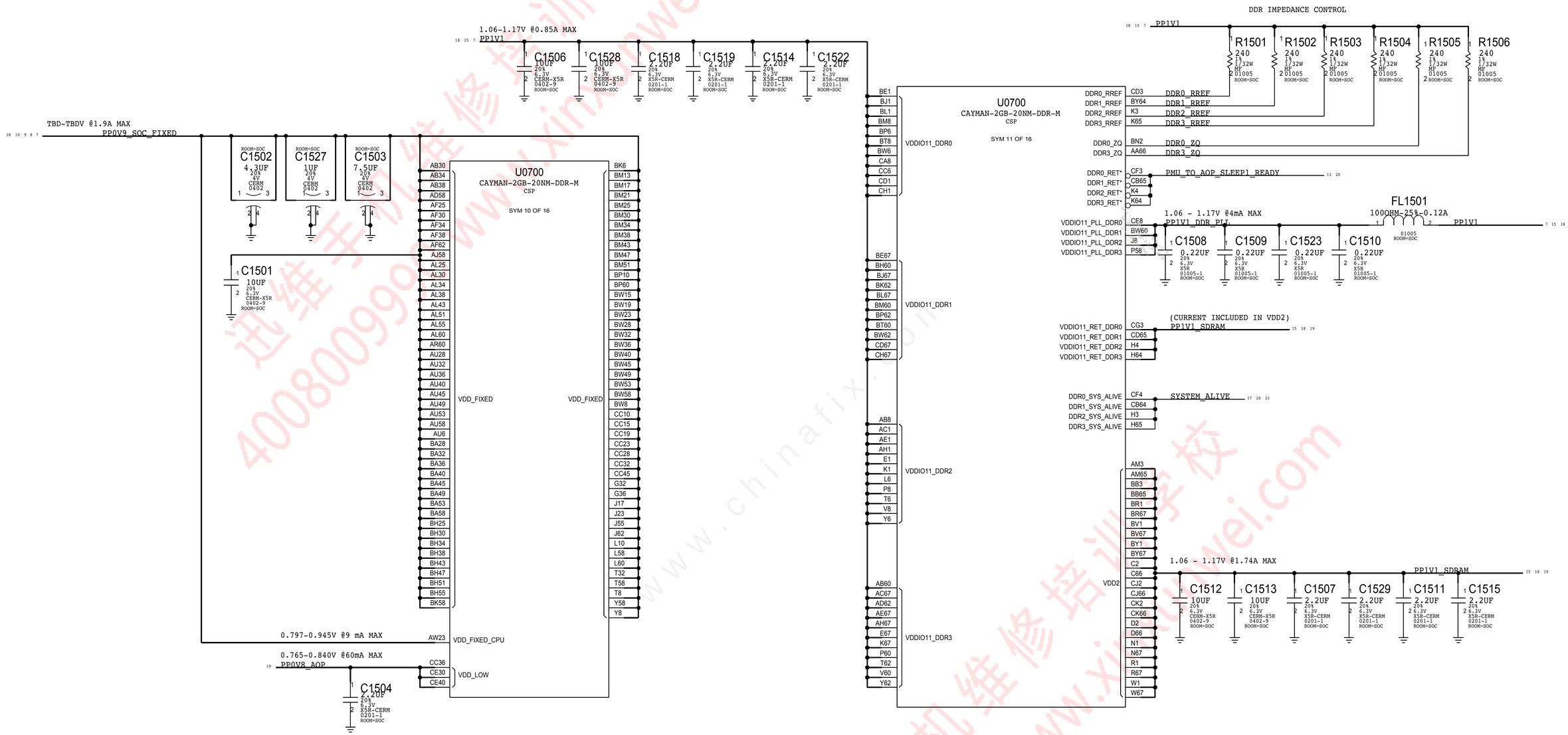

PAGE TITLE	spare
DRAWING NUMBER	051-00419
SIZE	D
REVISION	8.0.0
BRANCH	
PAGE	6 OF 53
SHEET	6 OF 81

迅维手机维修培训学校 4008009990 www.xinwei.com
www.chinafix.com

SOC - POWER SUPPLIES

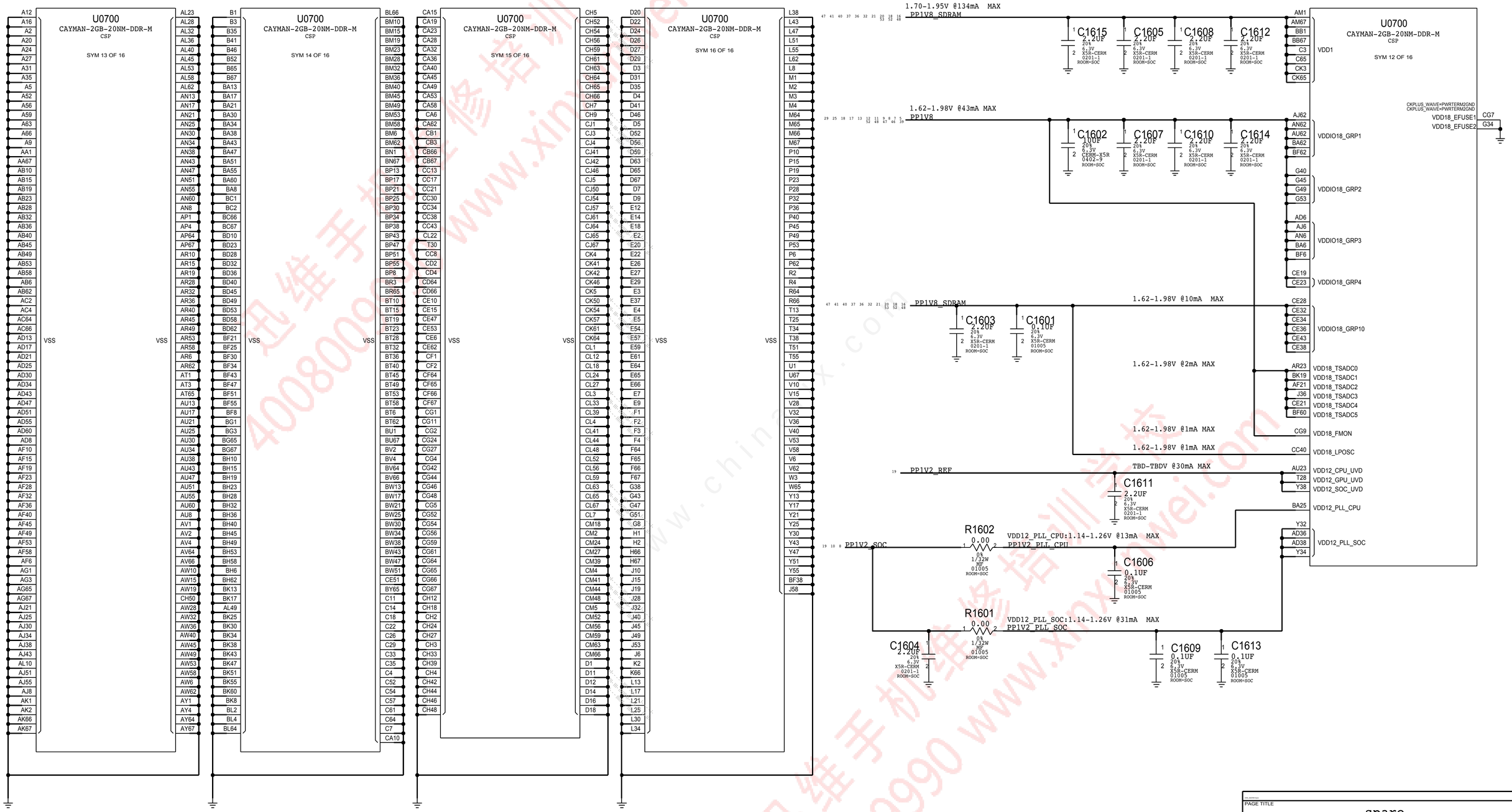

PAGE TITLE	spare
DRAWING NUMBER	051-00419
SIZE	D
REVISION	8.0.0
BRANCH	
PAGE	6 OF 53
SHEET	6 OF 81

迅维手机维修培训学校 www.xinxiwei.com 4008009990

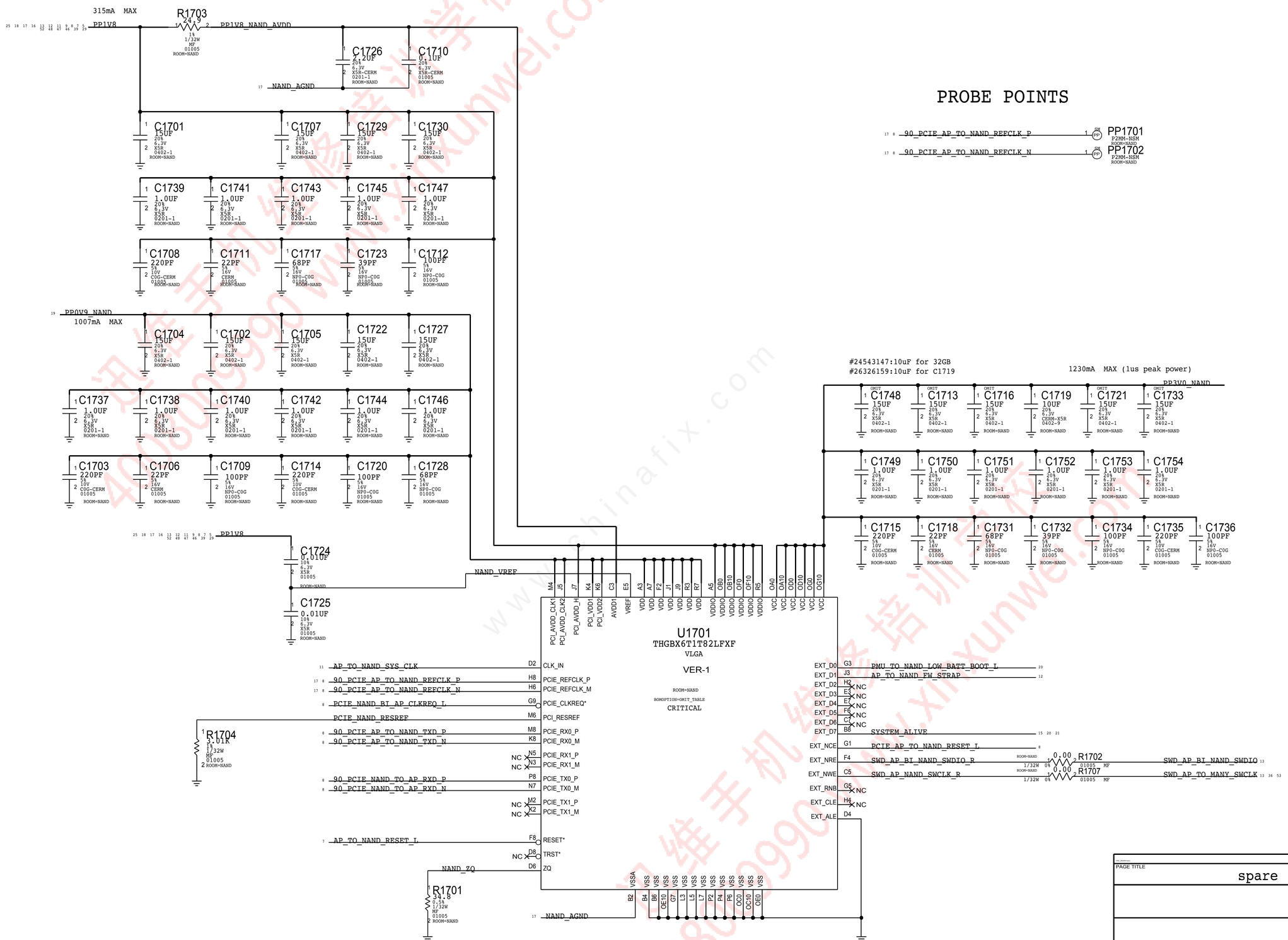

PAGE TITLE: spare

DRAWING NUMBER	051-00419
SIZE	D
REVISION	8.0.0
BRANCH	
PAGE	6 OF 53
SHEET	6 OF 81

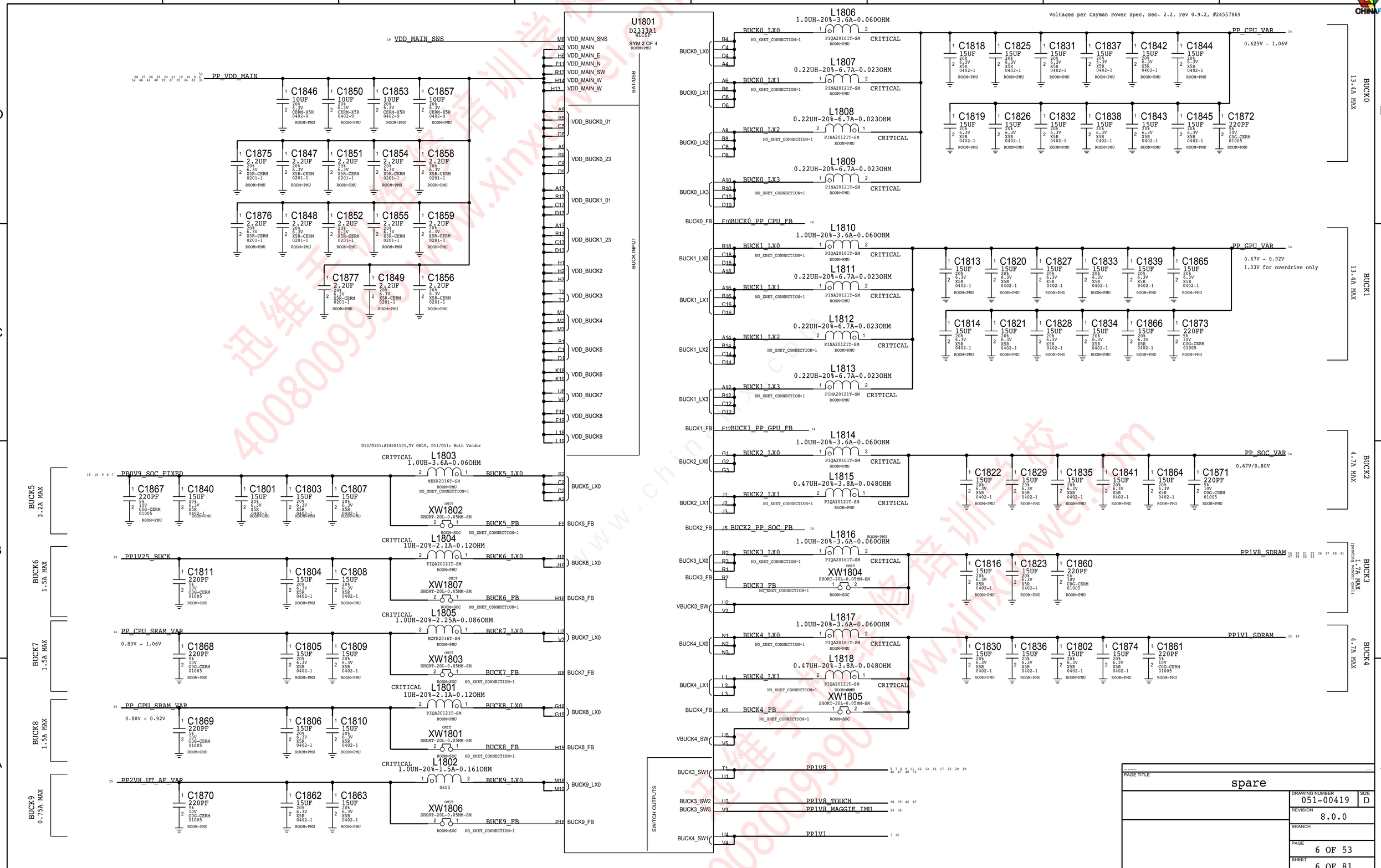
U1801
D2333A1
WLCSP
SYM 2 OF 4
ROOM=PMU
VDD_MAIN_SNS
VDD_MAIN
VDD_MAIN_E
VDD_MAIN_N
VDD_MAIN_SW
VDD_MAIN_W
VDD_MAIN
PP_VDD_MAIN
BAT/USB
VDD_BUCK0_01
VDD_BUCK0_23
VDD_BUCK1_01
VDD_BUCK1_23
VDD_BUCK2
VDD_BUCK3
VDD_BUCK4
VDD_BUCK5
VDD_BUCK6
VDD_BUCK7
VDD_BUCK8
VDD_BUCK9
BUCK INPUT
Voltages per Cayman Power Spec, Sec. 2.2, rev 0.9.2, #24557869
BUCK0
13.4A MAX
PP_CPU_VAR
0.625V - 1.06V
BUCK1
13.4A MAX
PP_GPU_VAR
0.67V - 0.92V
1.03V for overdrive only
BUCK2
4.7A MAX
PP_SOC_VAR
0.67V/0.80V
BUCK3
1.7A MAX
(pending vendor qual)
PP1V8_SDRAM
BUCK4
4.7A MAX
PP1V1_SDRAM
BUCK5
3.2A MAX
PP0V9_SOC_FIXED
BUCK6
1.5A MAX
PP1V25_BUCK
BUCK7
1.5A MAX
PP_CPU_SRAM_VAR
0.80V - 1.06V
BUCK8
1.5A MAX
PP_GPU_SRAM_VAR
0.80V - 0.92V
BUCK9
0.75A MAX
PP2V8_UT_AF_VAR
D10/D101:#24681501,TY ONLY, D11/D11: Both Vendor
L1806
1.0UH-20%-3.6A-0.060OHM
L1807
0.22UH-20%-6.7A-0.023OHM
L1808
0.22UH-20%-6.7A-0.023OHM
L1809
0.22UH-20%-6.7A-0.023OHM
L1810
1.0UH-20%-3.6A-0.060OHM
L1811
0.22UH-20%-6.7A-0.023OHM
L1812
0.22UH-20%-6.7A-0.023OHM
L1813
0.22UH-20%-6.7A-0.023OHM
L1814
1.0UH-20%-3.6A-0.060OHM
L1815
0.47UH-20%-3.8A-0.048OHM
L1816
1.0UH-20%-3.6A-0.060OHM
L1817
1.0UH-20%-3.6A-0.060OHM
L1818
0.47UH-20%-3.8A-0.048OHM
L1803
1.0UH-3.6A-0.060OHM
L1804
1UH-20%-2.1A-0.120OHM
L1805
1.0UH-20%-2.25A-0.086OHM
L1801
1UH-20%-2.1A-0.120OHM
L1802
1.0UH-20%-1.5A-0.161OHM
XW1802
XW1807
XW1803
XW1801
XW1806
XW1804
XW1805
SWITCH OUTPUTS
PP1V8
PP1V8_TOUCH
PP1V8_MAGGIE_TMU
PP1V1
PAGE TITLE
spare
DRAWING NUMBER
051-00419
SIZE
D
REVISION
8.0.0
BRANCH
PAGE
6 OF 53
SHEET
6 OF 81

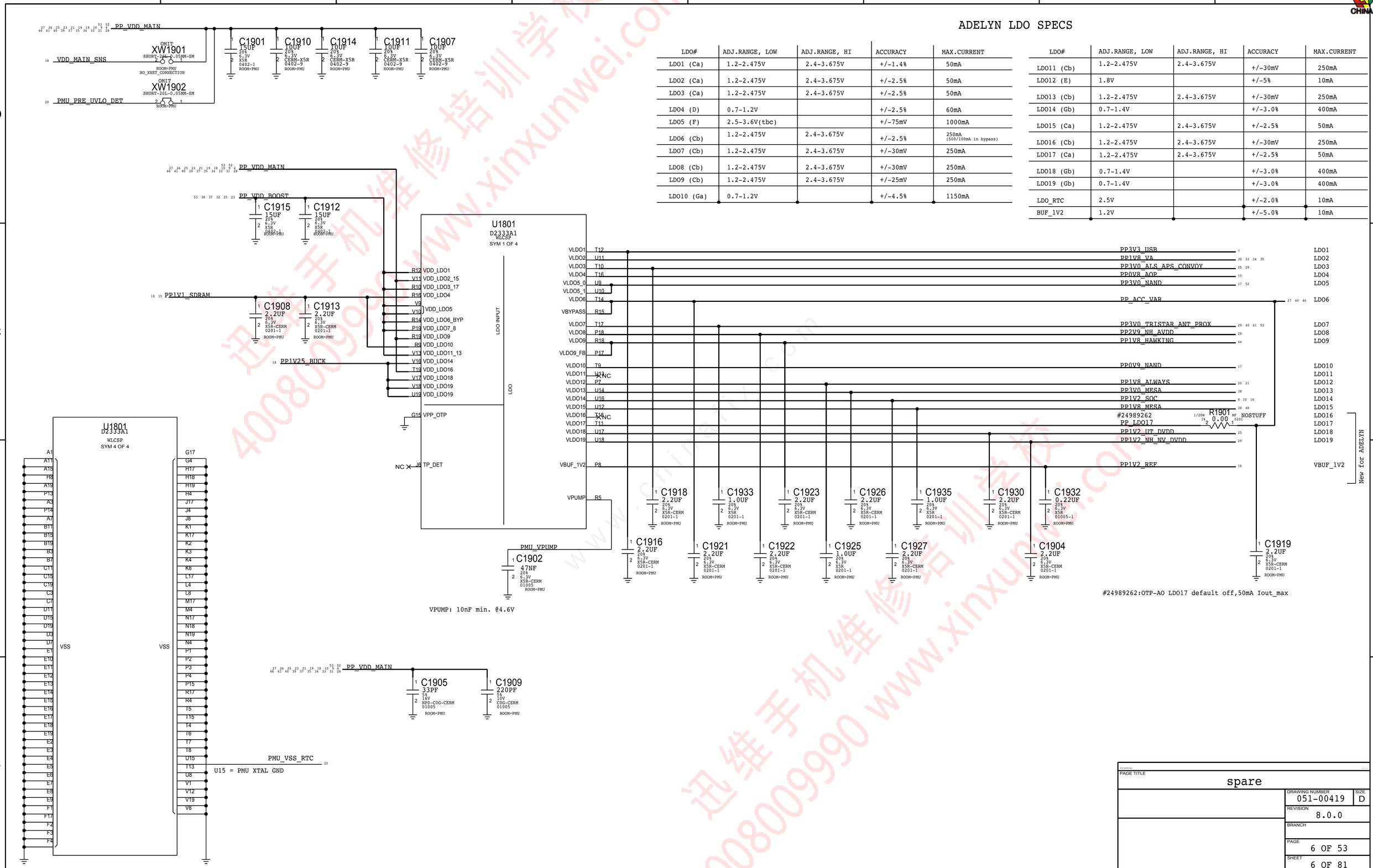

ADELYN LDO SPECS

LDO#	ADJ.RANGE, LOW	ADJ.RANGE, HI	ACCURACY	MAX.CURRENT
LDO1 (Ca)	1.2-2.475V	2.4-3.675V	+/-1.4%	50mA
LDO2 (Ca)	1.2-2.475V	2.4-3.675V	+/-2.5%	50mA
LDO3 (Ca)	1.2-2.475V	2.4-3.675V	+/-2.5%	50mA
LDO4 (D)	0.7-1.2V		+/-2.5%	60mA
LDO5 (F)	2.5-3.6V(tbc)		+/-75mV	1000mA
LDO6 (Cb)	1.2-2.475V	2.4-3.675V	+/-2.5%	250mA (500/100mA in bypass)
LDO7 (Cb)	1.2-2.475V	2.4-3.675V	+/-30mV	250mA
LDO8 (Cb)	1.2-2.475V	2.4-3.675V	+/-30mV	250mA
LDO9 (Cb)	1.2-2.475V	2.4-3.675V	+/-25mV	250mA
LDO10 (Ga)	0.7-1.2V		+/-4.5%	1150mA

LDO#	ADJ.RANGE, LOW	ADJ.RANGE, HI	ACCURACY	MAX.CURRENT
LDO11 (Cb)	1.2-2.475V	2.4-3.675V	+/-30mV	250mA
LDO12 (E)	1.8V		+/-5%	10mA
LDO13 (Cb)	1.2-2.475V	2.4-3.675V	+/-30mV	250mA
LDO14 (Gb)	0.7-1.4V		+/-3.0%	400mA
LDO15 (Ca)	1.2-2.475V	2.4-3.675V	+/-2.5%	50mA
LDO16 (Cb)	1.2-2.475V	2.4-3.675V	+/-30mV	250mA
LDO17 (Ca)	1.2-2.475V	2.4-3.675V	+/-2.5%	50mA
LDO18 (Gb)	0.7-1.4V		+/-3.0%	400mA
LDO19 (Gb)	0.7-1.4V		+/-3.0%	400mA
LDO_RTC	2.5V		+/-2.0%	10mA
BUF_1V2	1.2V		+/-5.0%	10mA

PAGE TITLE: spare

DRAWING NUMBER: 051-00419 SIZE: D

REVISION: 8.0.0

BRANCH:

PAGE: 6 OF 53

SHEET: 6 OF 81

迅维手机维修培训学校 4008009990 www.xinxunwei.com

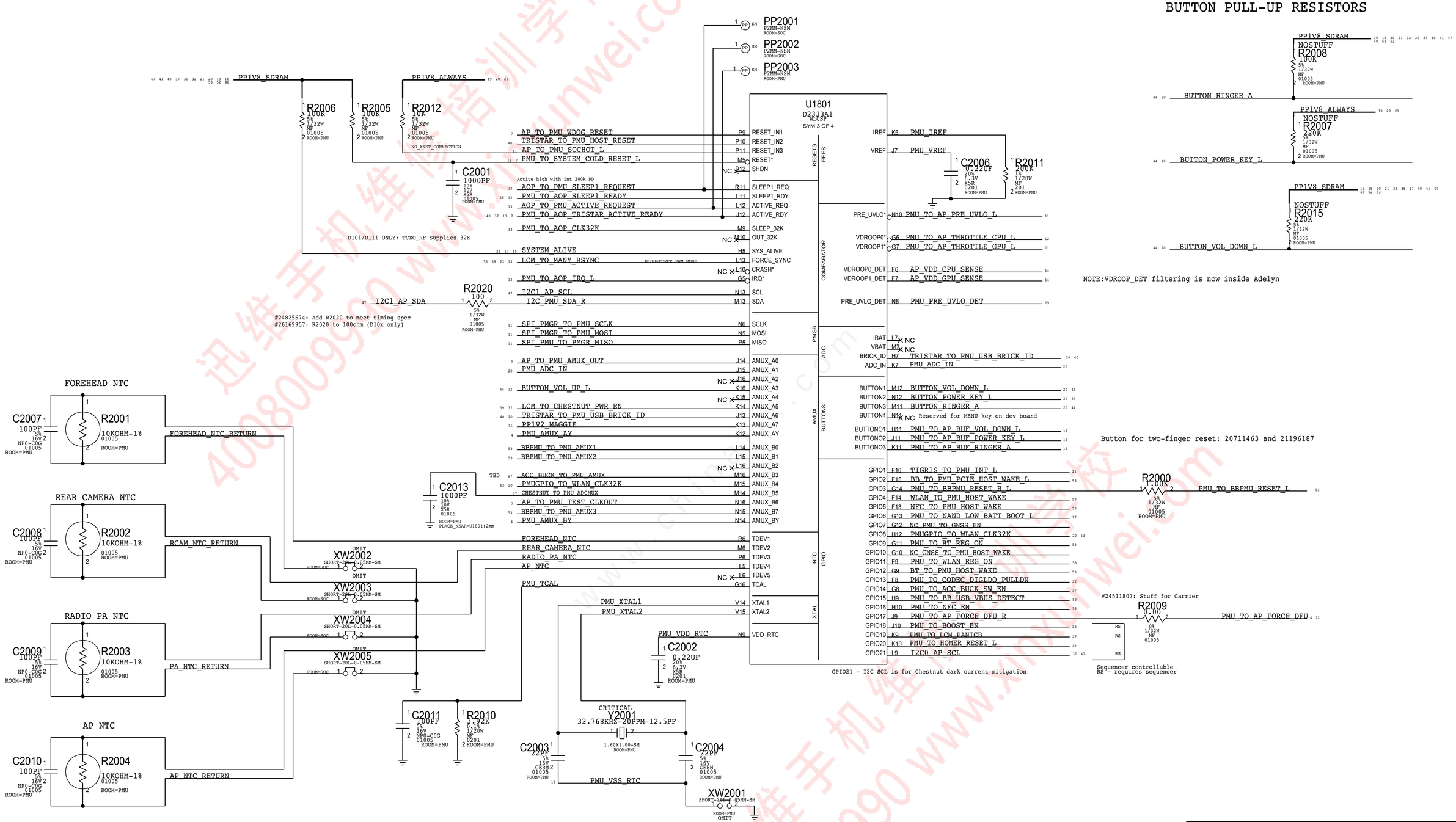

PAGE TITLE	spare
DRAWING NUMBER	051-00419
SIZE	D
REVISION	8.0.0
BRANCH	
PAGE	6 OF 53
SHEET	6 OF 81

迅维手机维修培训学校 4008009990 www.xunwei.com

TIGRIS CHARGER

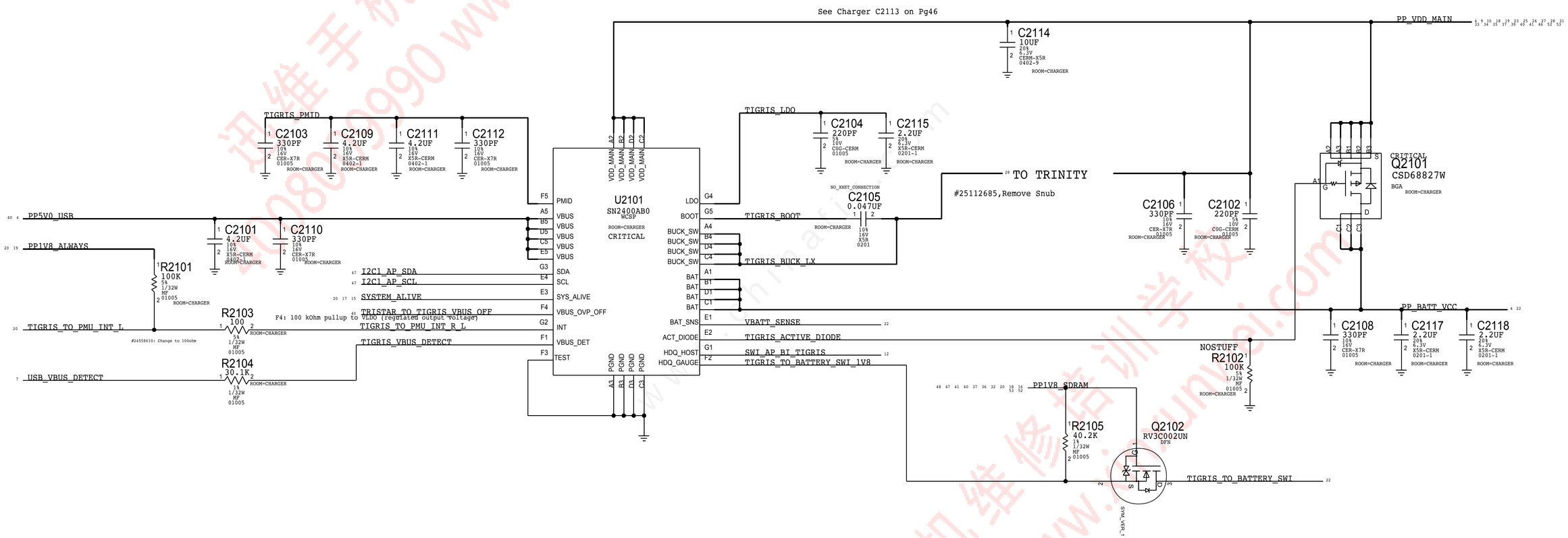

PAGE TITLE	spare
DRAWING NUMBER	051-00419
SIZE	D
REVISION	8.0.0
BRANCH	
PAGE	6 OF 53
SHEET	6 OF 81

迅维手机维修培训学校 4008009990 www.xinxunwei.com

BATTERY CONNECTOR

THIS ONE ON MLB ---> 516S00172 (matches d10 mlb MCO rev 27)

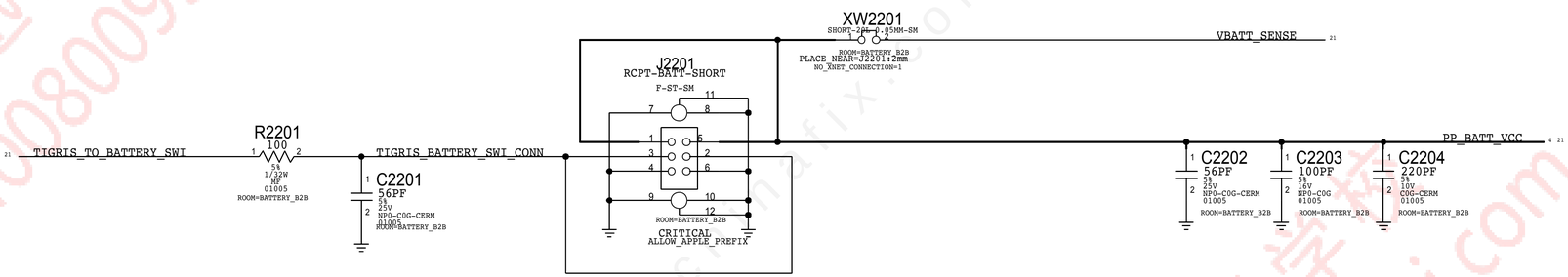

PAGE TITLE	spare
DRAWING NUMBER	051-00419
SIZE	D
REVISION	8.0.0
BRANCH	
PAGE	6 OF 53
SHEET	6 OF 81

迅维手机维修培训学校 4008009990 www.xinxunwei.com

BOOST

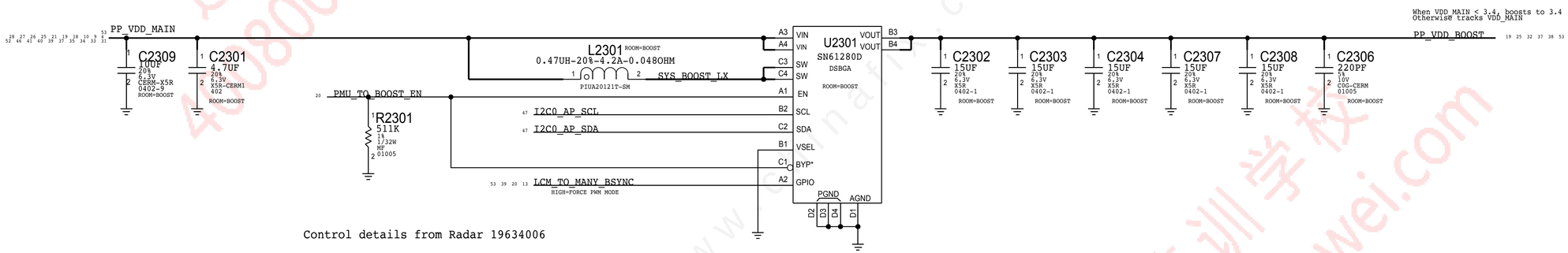

Control details from Radar 19634006

PAGE TITLE	spare
DRAWING NUMBER	051-00419
SIZE	D
REVISION	8.0.0
BRANCH	
PAGE	6 OF 53
SHEET	6 OF 81

迅维手机维修培训学校 4008009990 www.xinxunwei.com

CARBON - ACCEL & GYRO

INVENSENSE, MPU-6800: C2403=0.1UF

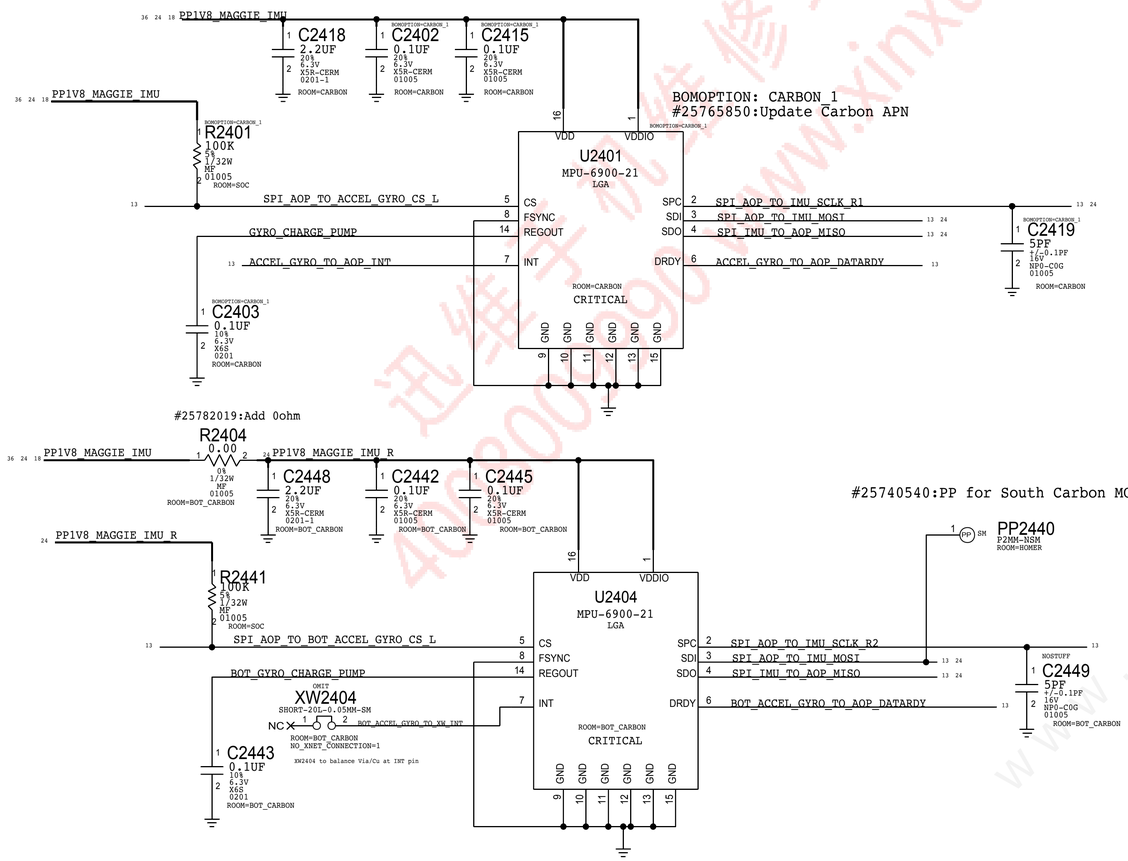

MAGNESIUM - COMPASS

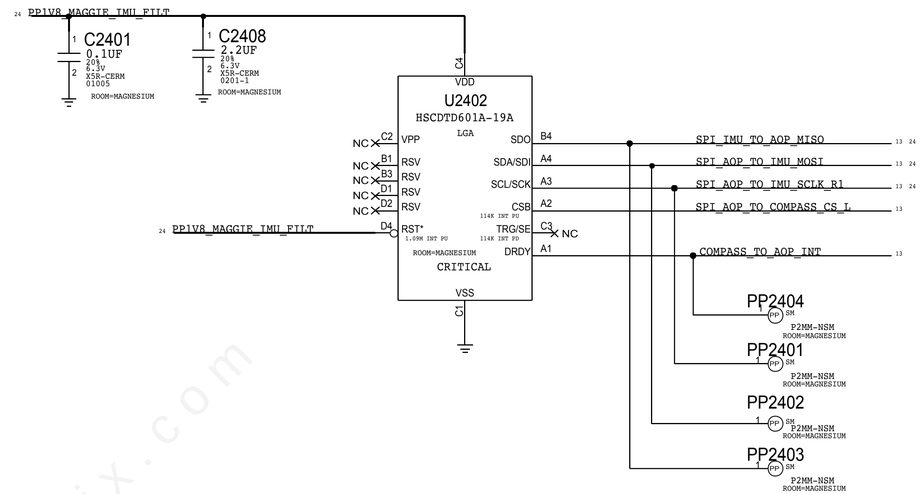

PHOSPHORUS

#24593845, #25691124

BOSCH (APN:338S00188): nostuff C2420/C2421/C2422/C2423 and R2403 PU

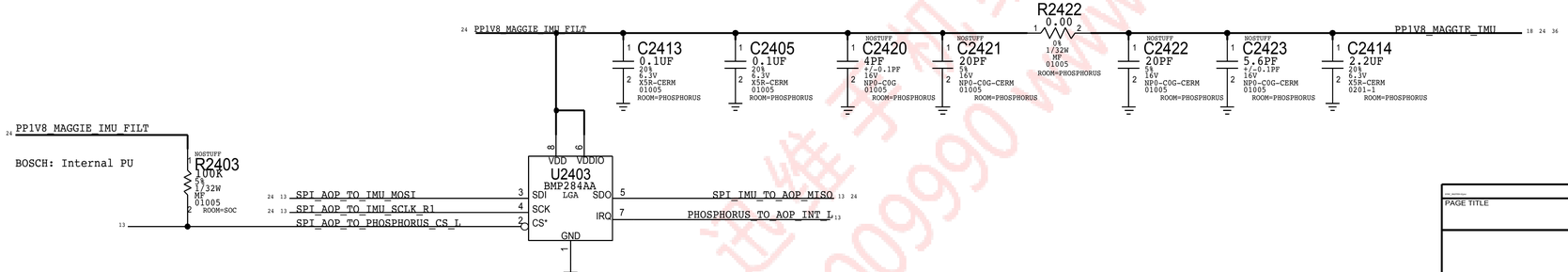

PAGE TITLE	spare
DRAWING NUMBER	051-00419
SIZE	D
REVISION	8.0.0
BRANCH	
PAGE	6 OF 53
SHEET	6 OF 81

迅维手机维修培训学校 www.xinxunwei.com 4008009990 www.chinafix.com

THIS PAGE UNIQUE TO SMALL FORM FACTOR

UTAH POWER

NOTE: OUTPUT IMPDEANCE MUST BE >0.005-OHM
IN ORDER TO MEET CAP ESR REQUIREMENT PER LDO SPEC.
VENDOR ALSO RECOMMENDS CIN = COUT FOR STABILITY

TI:353S00015
ST:353S00889

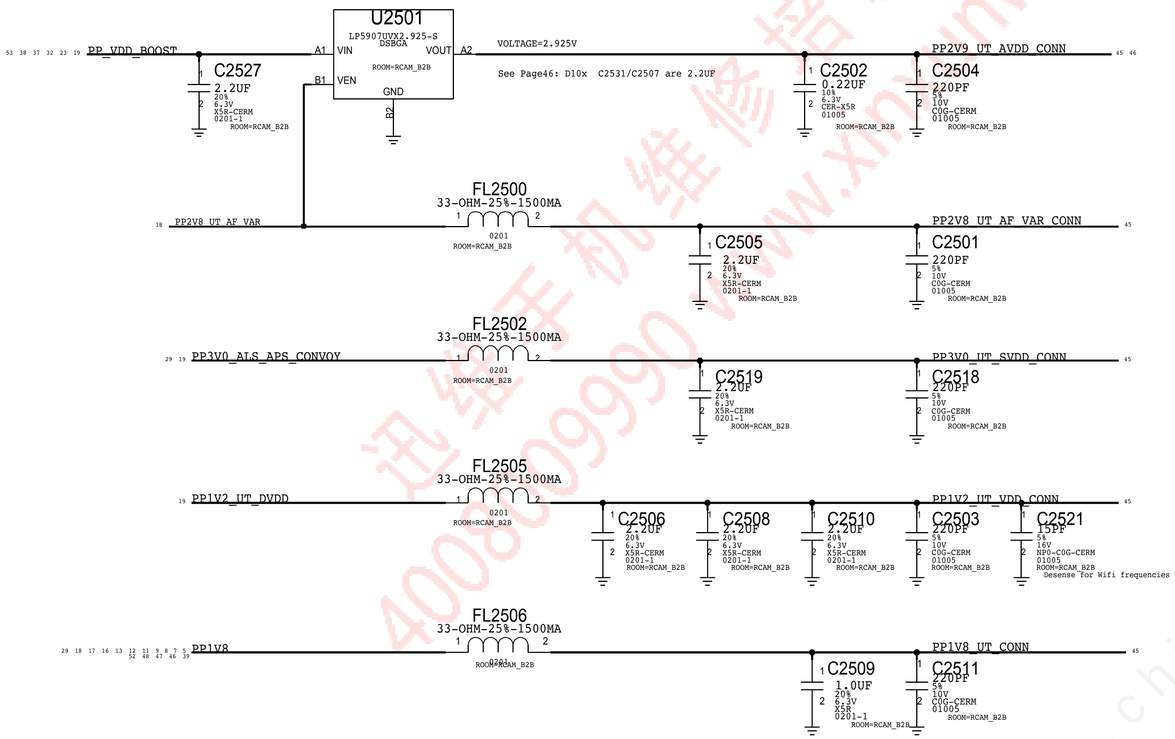

IO FILTERS

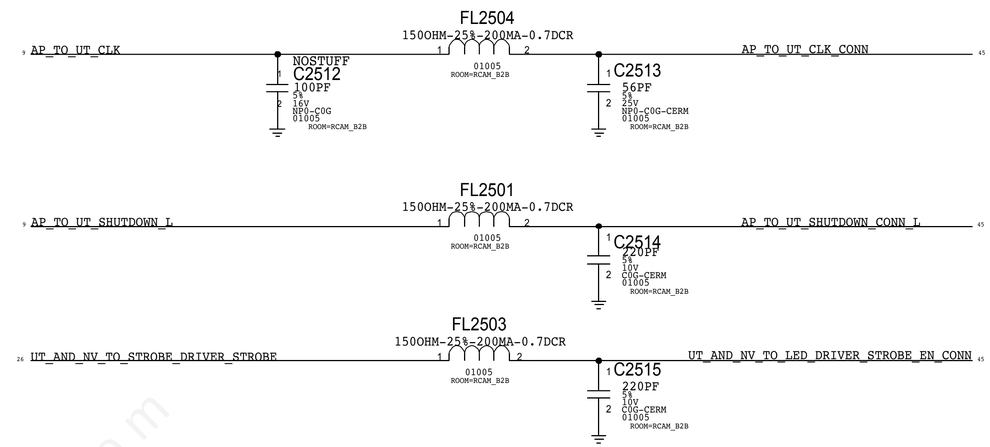

LPDP FILTERS

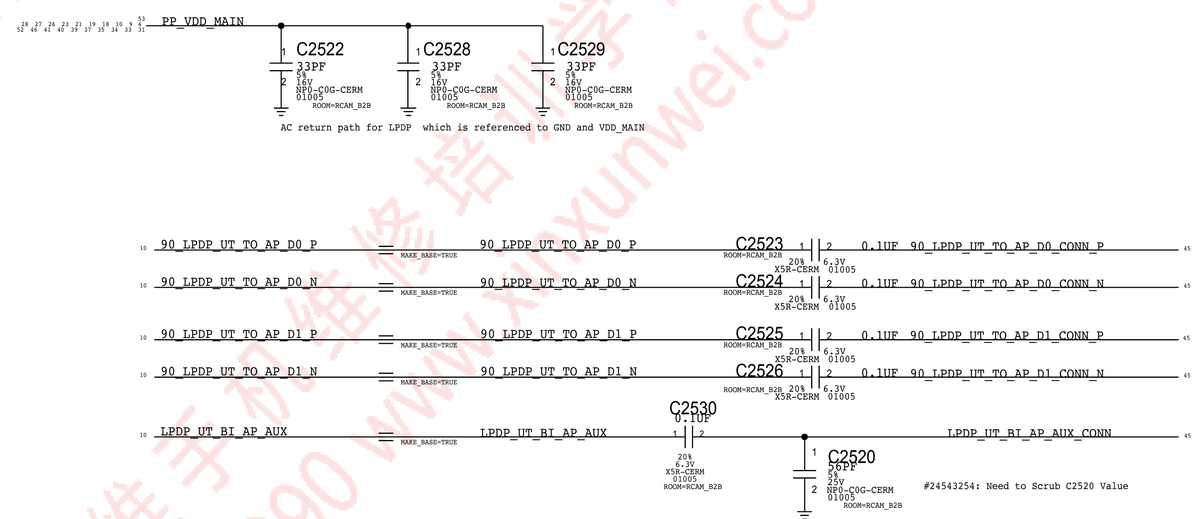

PAGE TITLE	spare
DRAWING NUMBER	051-00419
SIZE	D
REVISION	8.0.0
BRANCH	
PAGE	6 OF 53
SHEET	6 OF 81

迅维手机维修培训学校 www.xinxunwei.com 4008009990 www.chinafix.com

STROBE DRIVERS INSIDE NEO SIP MODULE

D10/sip_neo

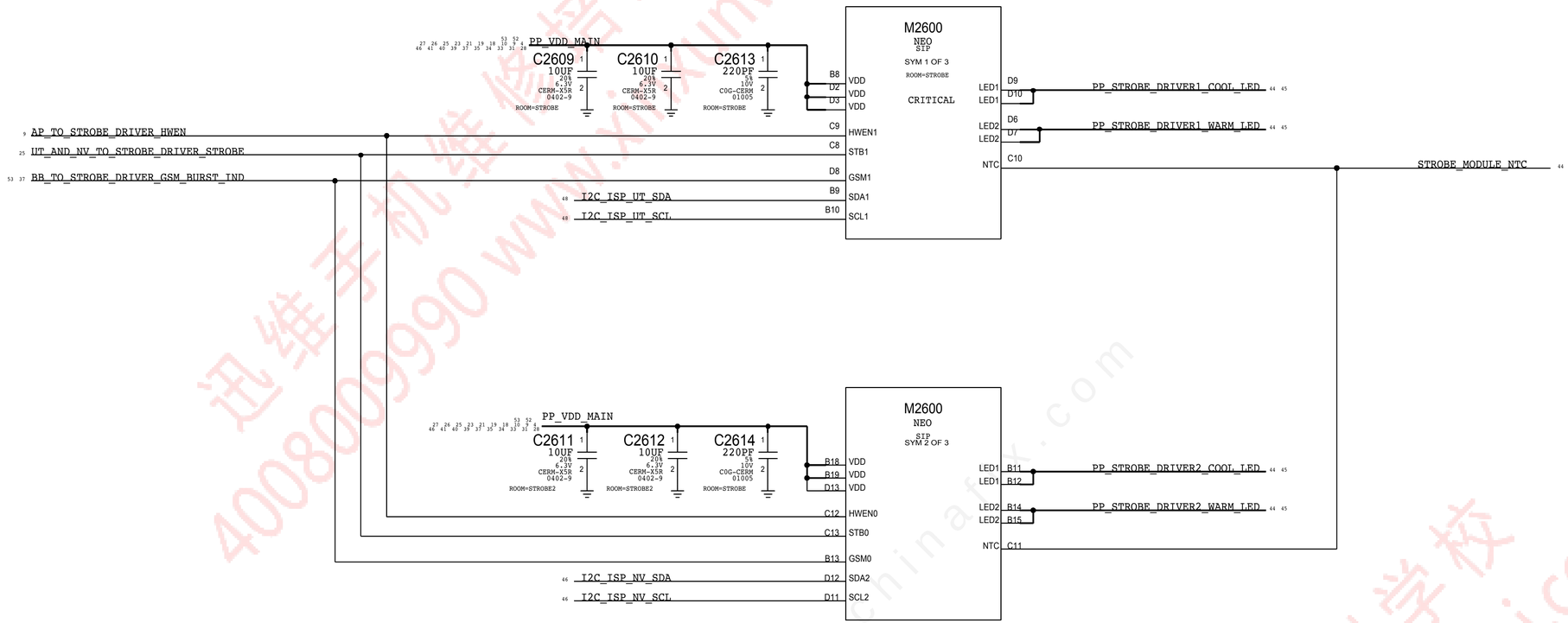

PAGE TITLE	spare
DRAWING NUMBER	051-00419
SIZE	D
REVISION	8.0.0
BRANCH	
PAGE	6 OF 53
SHEET	6 OF 81

迅维手机维修培训学校 4008009990 www.xinxunwei.com

ACCESSORY BUCK

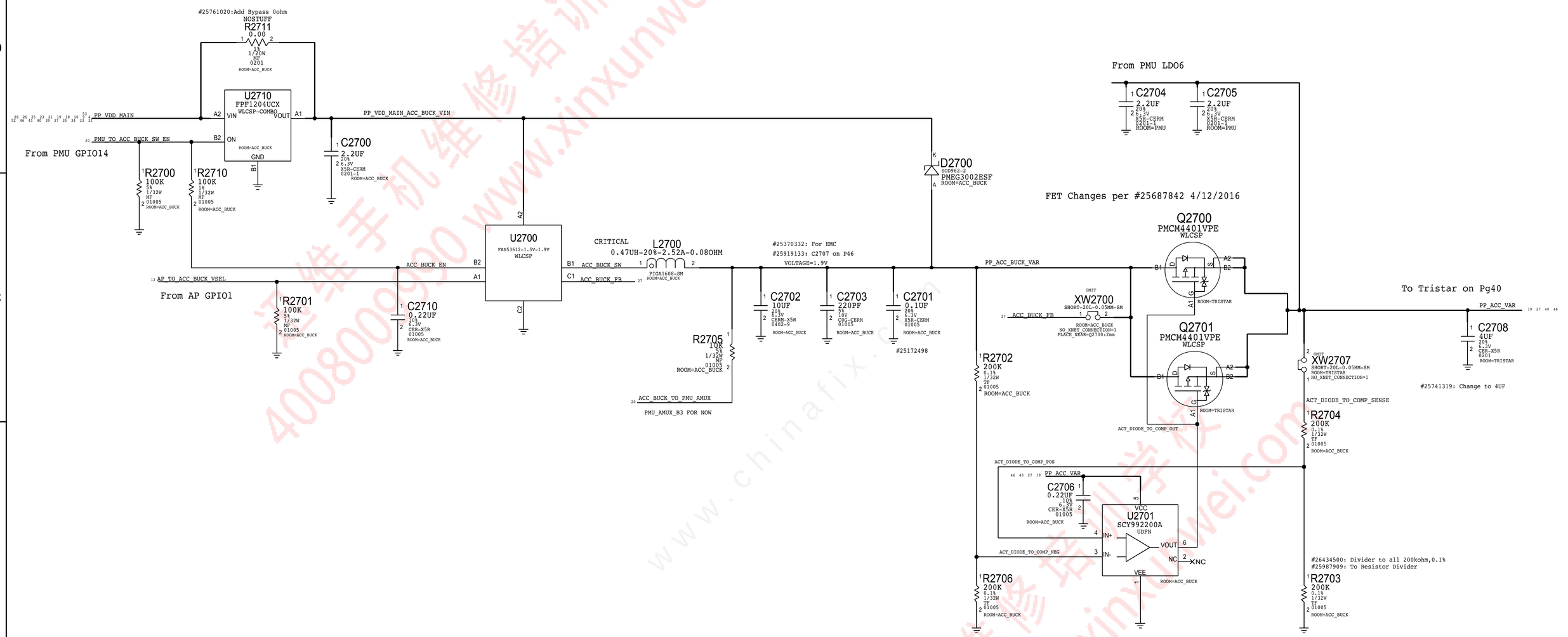

PAGE TITLE	spare
DRAWING NUMBER	051-00419
SIZE	D
REVISION	8.0.0
BRANCH	
PAGE	6 OF 53
SHEET	6 OF 81

迅维手机维修培训学校 www.xinxunwei.com 4008009990

THIS PAGE UNIQUE TO SMALL FORM FACTOR

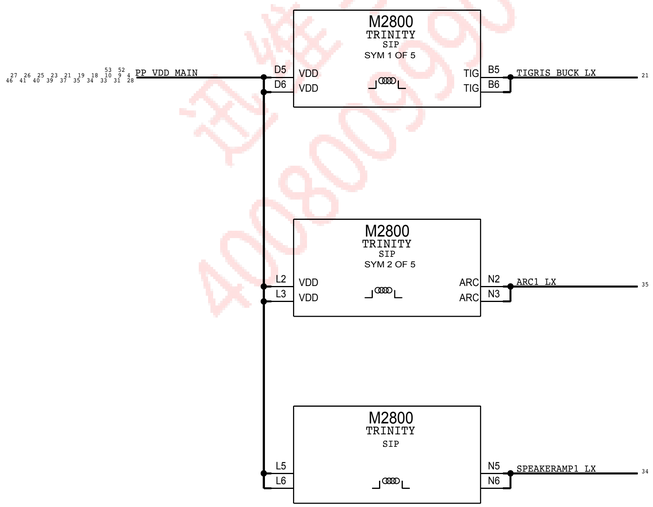

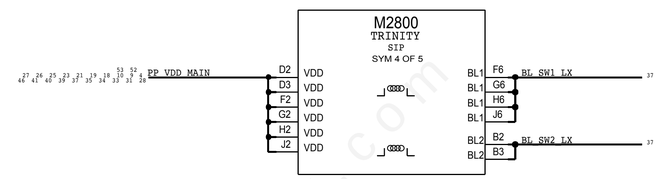

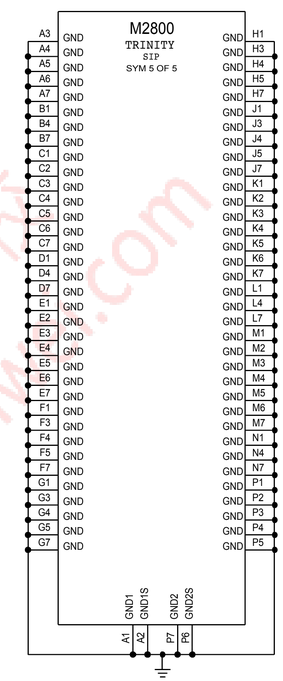

PAGE TITLE	spare
DRAWING NUMBER	051-00419
SIZE	D
REVISION	8.0.0
BRANCH	
PAGE	6 OF 53
SHEET	6 OF 81

迅维手机维修培训学校 4008009990 www.xinxunwei.com
www.chinafix.com

NEW HAMPSHIRE POWER

FL2901 33-OHM-25%-1500MA
PP1V8 → PP1V8_NH_TO_CONN
C2914 0.1UF 20% 6.3V X5R-CERM 01005 ROOM=FOREHEAD
C2902 220PF 5% 10V C0G-CERM 01005 ROOM=FOREHEAD

FL2902 33-OHM-25%-1500MA
PP1V2_NH_NV_DVDD → PP1V2_NH_DVDD_CONN
C2916 2.2UF 20% 6.3V X5R-CERM 0201-1 ROOM=FOREHEAD
C2915 0.1UF 20% 6.3V X5R-CERM 01005 ROOM=FOREHEAD
C2903 220PF 5% 10V C0G-CERM 01005 ROOM=FOREHEAD

FL2903 10-OHM-750MA
PP2V9_NH_AVDD → PP2V9_NH_AVDD_CONN
C2909 2.2UF 20% 6.3V X5R-CERM 0201-1 ROOM=FOREHEAD
C2901 0.1UF 20% 6.3V X5R-CERM 01005 ROOM=FOREHEAD
C2904 220PF 5% 10V C0G-CERM 01005 ROOM=FOREHEAD

NEW HAMPSHIRE I/O

FL2907 150OHM-25%-200MA-0.7DCR
AP_TO_NH_CLK → AP_TO_NH_CLK_CONN
C2910 56PF 5% 25V NP0-C0G-CERM 01005 ROOM=FOREHEAD

FL2908 150OHM-25%-200MA-0.7DCR
AP_TO_NH_SHUTDOWN_L → AP_TO_NH_SHUTDOWN_CONN_L
C2911 220PF 5% 10V C0G-CERM 01005 ROOM=FOREHEAD

CONVOY I/O

#25657495: Update FL2905 to 100ohm

R2905 100 5% 1/32W MF 01005 ROOM=FOREHEAD
PDM_ADARE_TO_CONVOY_CLK → PDM_ADARE_TO_CONVOY_CLK_CONN
C2905 56PF 5% 25V NP0-C0G-CERM 01005 ROOM=FOREHEAD

FL2906 150OHM-25%-200MA-0.7DCR
PDM_CONVOY_TO_ADARE_DATA → PDM_CONVOY_TO_ADARE_DATA_CONN
C2906 56PF 5% 25V NP0-C0G-CERM 01005 ROOM=FOREHEAD

PROX/ALS I/O

#25170697: R2915 to 240ohm/C2921 to 220pF

R2915 240 1% 1/32W MF 01005 ROOM=FOREHEAD
PROX_BI_AP_AOP_INT_PWM_L → PROX_BI_AP_AOP_INT_PWM_L_CONN
C2921 220PF 5% 10V C0G-CERM 01005 ROOM=FOREHEAD

FL2911 150OHM-25%-200MA-0.7DCR
ALS_TO_AP_INT_L → ALS_TO_AP_INT_CONN_L
C2924 56PF 5% 25V NP0-C0G-CERM 01005 ROOM=FOREHEAD

PROX, ALS, & CONVOY POWER

FL2913 150OHM-25%-200MA-0.7DCR
PP3V0_ALS_APS_CONVOY → PP3V0_ALS_CONVOY_CONN
C2917 2.2UF 20% 6.3V X5R-CERM 0201-1 ROOM=FOREHEAD
C2926 220PF 5% 10V C0G-CERM 01005 ROOM=FOREHEAD

FL2910 150OHM-25%-200MA-0.7DCR
PP3V0_TRISTAR_ANT_PROX → PP3V0_PROX_CONN
#24511567: Remove C2918
C2927 2.2UF 20% 6.3V X5R-CERM 0201-1 ROOM=FOREHEAD
C2908 220PF 5% 10V C0G-CERM 01005 ROOM=FOREHEAD

SPEAKER2

C2932 220PF 5% 10V C0G-CERM 01005 ROOM=FOREHEAD (NO_XNET_CONNECTION=1)
SPEAKERAMP2_TO_SPEAKER_OUT_POS
C2935 220PF 5% 10V C0G-CERM 01005 ROOM=FOREHEAD (NO_XNET_CONNECTION=1)
SPEAKERAMP2_TO_SPEAKER_OUT_NEG
C2931 220PF 5% 10V C0G-CERM 01005 ROOM=FOREHEAD (NO_XNET_CONNECTION=1)

R2903 0.00 0% 1/32W MF 01005 ROOM=FOREHEAD
SPEAKER_TO_SPEAKERAMP2_VSENSE_P → SPEAKER_TO_SPEAKERAMP2_VSENSE_CONN_P
C2933 220PF 5% 10V C0G-CERM 01005 ROOM=FOREHEAD (NO_XNET_CONNECTION=1)

R2904 0.00 0% 1/32W MF 01005 ROOM=FOREHEAD
SPEAKER_TO_SPEAKERAMP2_VSENSE_N → SPEAKER_TO_SPEAKERAMP2_VSENSE_CONN_N
C2934 220PF 5% 10V C0G-CERM 01005 ROOM=FOREHEAD (NO_XNET_CONNECTION=1)

MIC3

FL2914 150OHM-25%-200MA-0.7DCR
PP_CODEC_TO_FRONTMIC3_BIAS → PP_CODEC_TO_FRONTMIC3_BIAS_CONN
DZ2905 6.8V-100PF 01005 ROOM=FOREHEAD

FL2904 150OHM-25%-200MA-0.7DCR
FRONTMIC3_TO_CODEC_AIN4_N → FRONTMIC3_TO_CODEC_AIN4_CONN_N
DZ2906 6.8V-100PF 01005 ROOM=FOREHEAD (NO_XNET_CONNECTION=1)

FL2909 150OHM-25%-200MA-0.7DCR
FRONTMIC3_TO_CODEC_AIN4_P → FRONTMIC3_TO_CODEC_AIN4_CONN_P
DZ2907 6.8V-100PF 01005 ROOM=FOREHEAD (NO_XNET_CONNECTION=1)

PAGE TITLE	spare
DRAWING NUMBER	051-00419
SIZE	D
REVISION	8.0.0
BRANCH	
PAGE	6 OF 53
SHEET	6 OF 81

迅维手机维修培训学校 www.xinxunwei.com 4008009990

迅维手机维修培训学校 4008009990 www.xinxunwei.com
www.chinafix.com
迅维手机维修培训学校 4008009990 www.xinxunwei.com

PAGE TITLE
spare

DRAWING NUMBER 051-00419	SIZE D
REVISION 8.0.0	
BRANCH	
PAGE 6 OF 53	
SHEET 6 OF 81	

CALTRA AUDIO CODEC (ANALOG INPUTS & OUTPUTS)

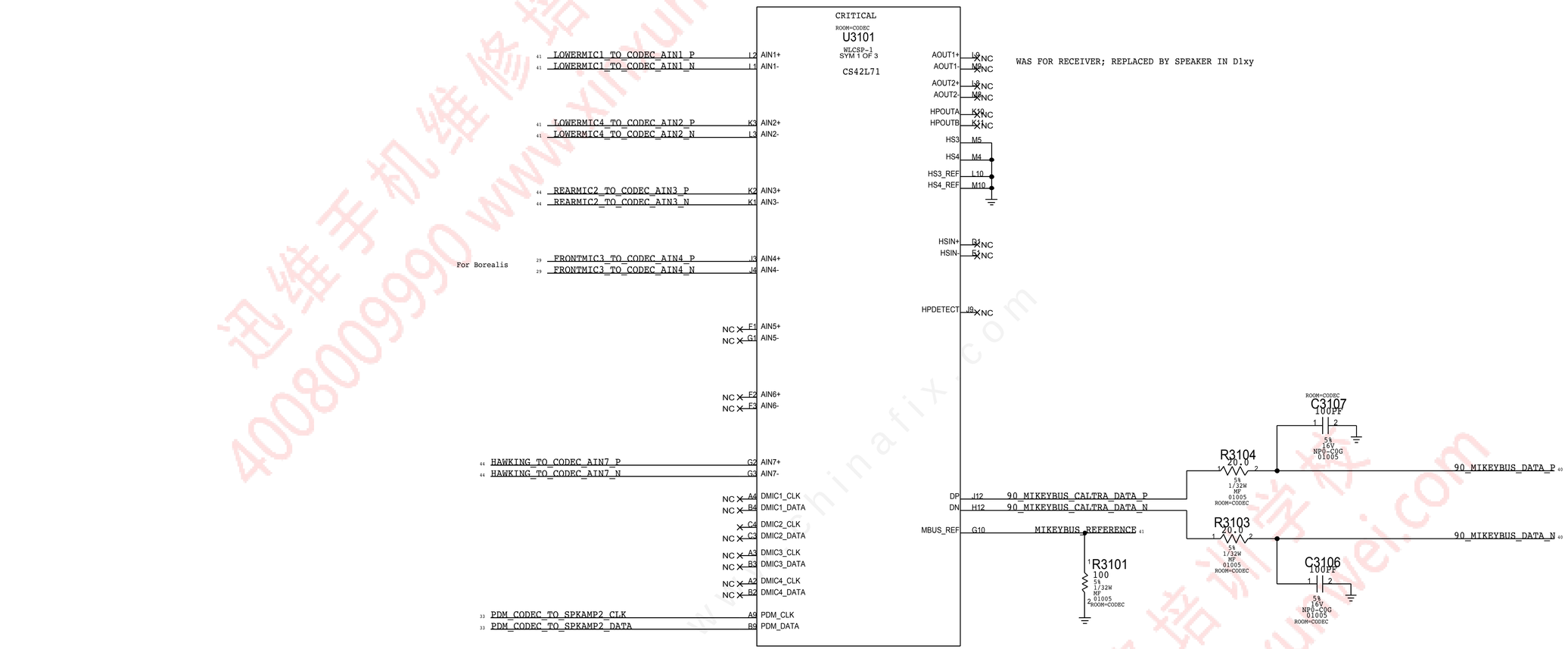

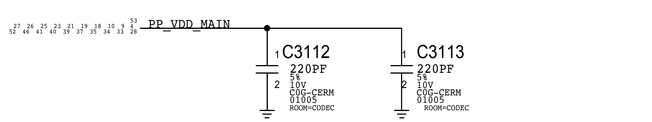

AC return path for Mikeybus which is referenced to GND and VDD_MAIN

Radar 21203307

PAGE TITLE	spare
DRAWING NUMBER	051-00419
SIZE	D
REVISION	8.0.0
BRANCH	
PAGE	6 OF 53
SHEET	6 OF 81

迅维手机维修培训学校 4008009990 www.xinxunwei.com

CALTRA AUDIO CODEC (POWER & I/O)

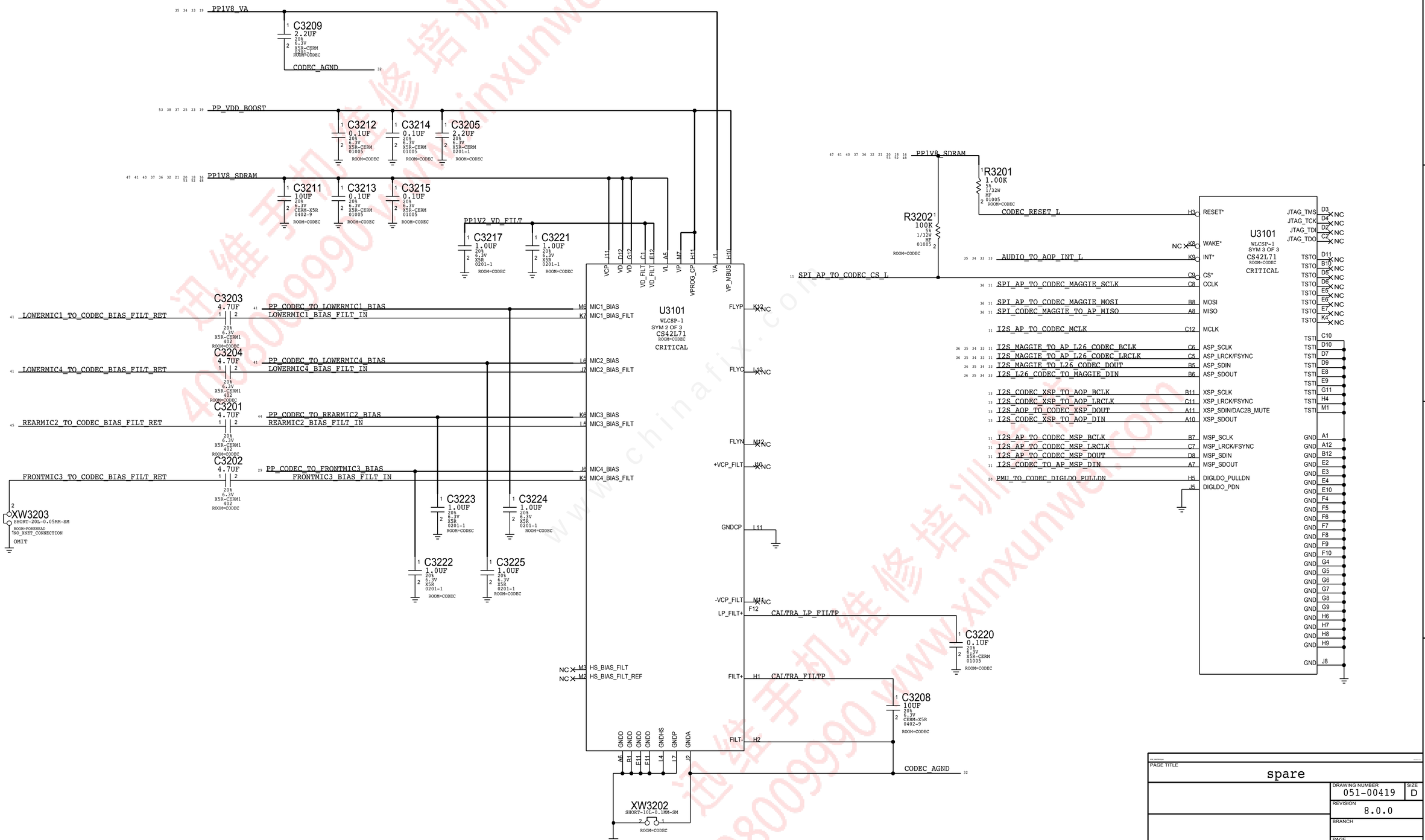

PAGE TITLE: spare

DRAWING NUMBER	051-00419
SIZE	D
REVISION	8.0.0
BRANCH	
PAGE	6 OF 53
SHEET	6 OF 81

SPEAKER AMPLIFIER 2 (North)

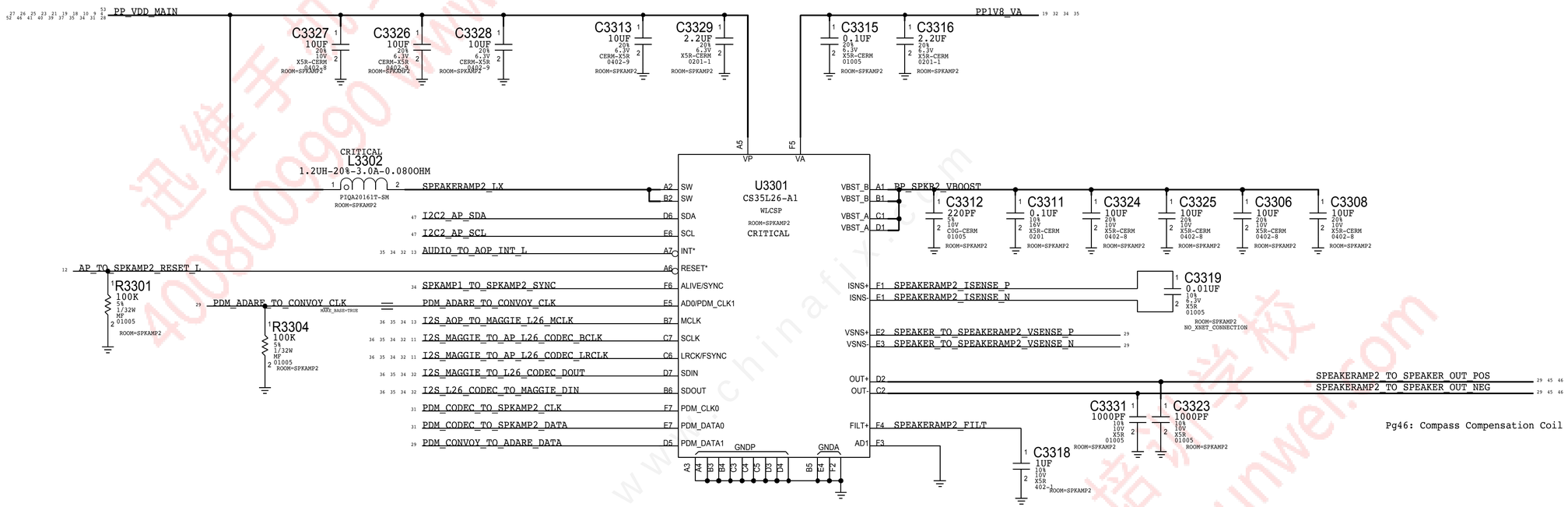

PAGE TITLE	spare
DRAWING NUMBER	051-00419
SIZE	D
REVISION	8.0.0
BRANCH	
PAGE	6 OF 53
SHEET	6 OF 81

迅维手机维修培训学校 www.xinxunwei.com 4008009990

SPEAKER AMPLIFIER 1

(South)

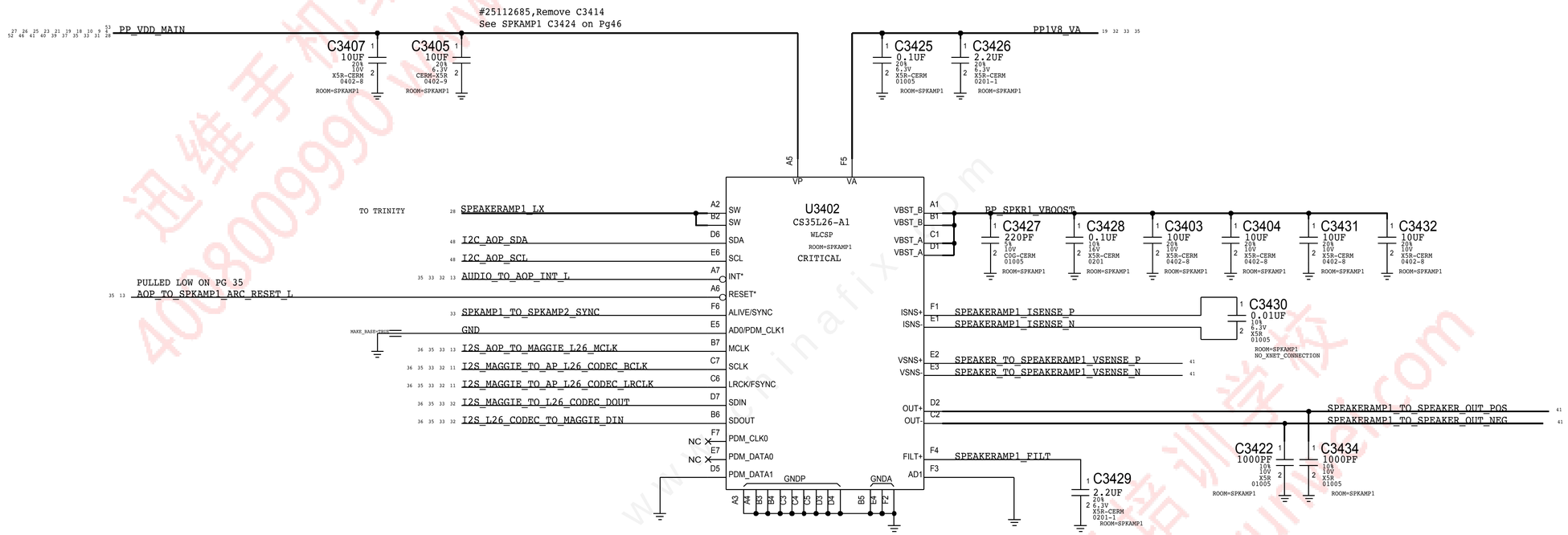

PAGE TITLE	spare
DRAWING NUMBER	051-00419
SIZE	D
REVISION	8.0.0
BRANCH	
PAGE	6 OF 53
SHEET	6 OF 81

迅维手机维修培训学校 4008009990 www.xinxunwei.com

ARC DRIVER

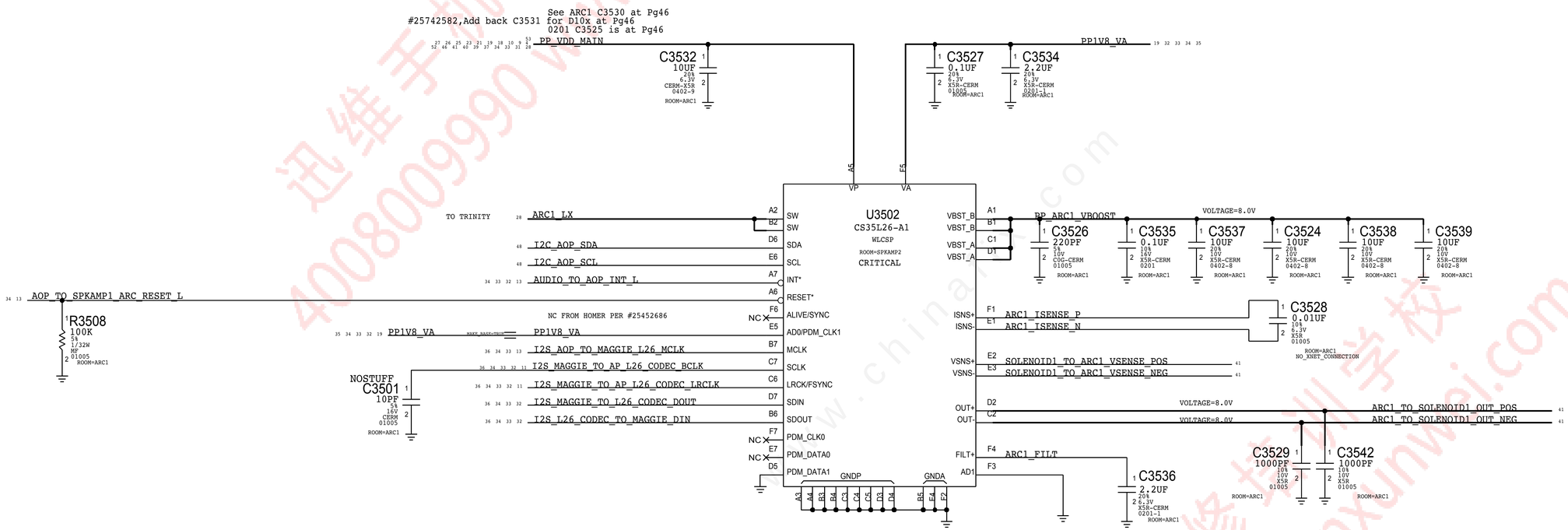

PAGE TITLE	spare
DRAWING NUMBER	051-00419
SIZE	D
REVISION	8.0.0
BRANCH	
PAGE	6 OF 53
SHEET	6 OF 81

迅维手机维修培训学校 www.xinxunwei.com 4008009990

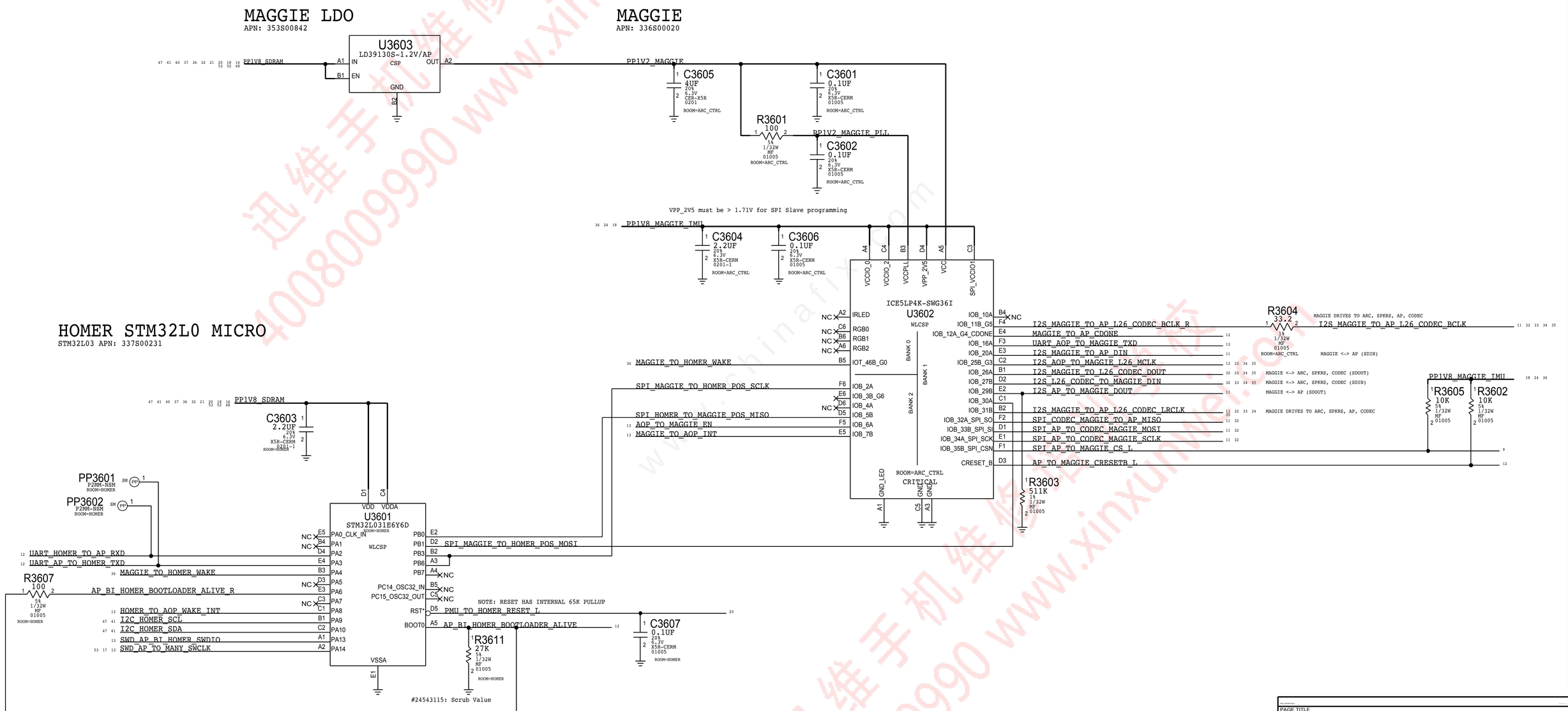

PAGE TITLE
spare

DRAWING NUMBER	051-00419
SIZE	D
REVISION	8.0.0
BRANCH	
PAGE	6 OF 53
SHEET	6 OF 81

迅维手机维修培训学校 4008009990 www.xinxunwei.com

DISPLAY & TOUCH - POWER SUPPLIES

CHESTNUT DISPLAY PMU

APN:338S1172

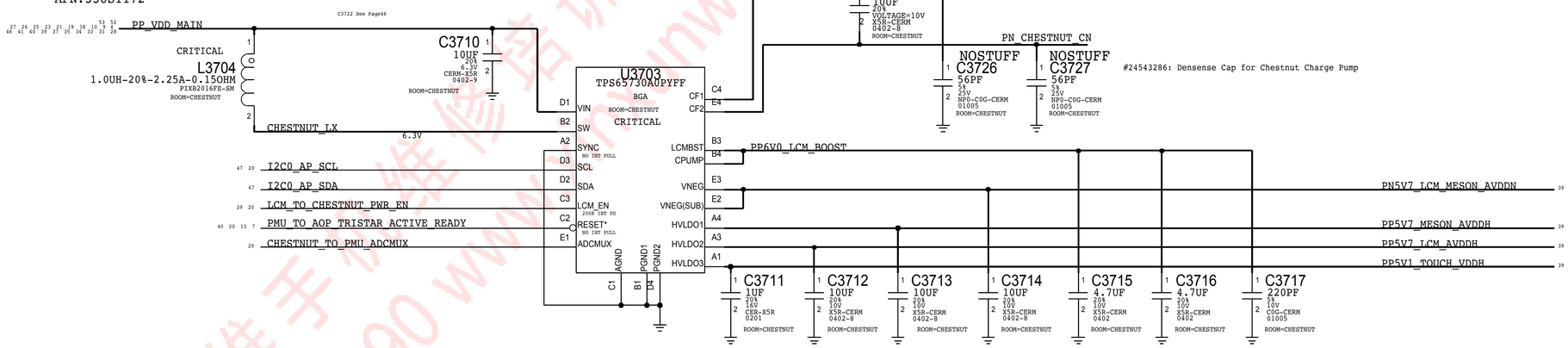

LED BACKLIGHT DRIVER - 6LED

APN:353s00640

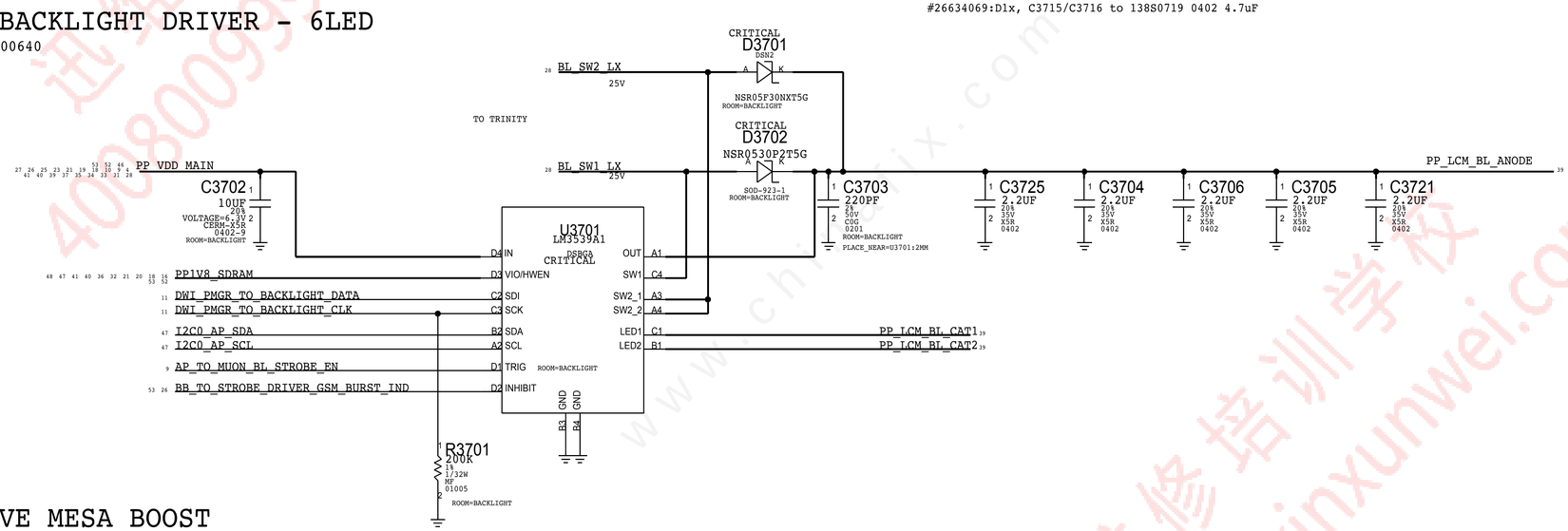

MOJAVE MESA BOOST

APN:353S00671

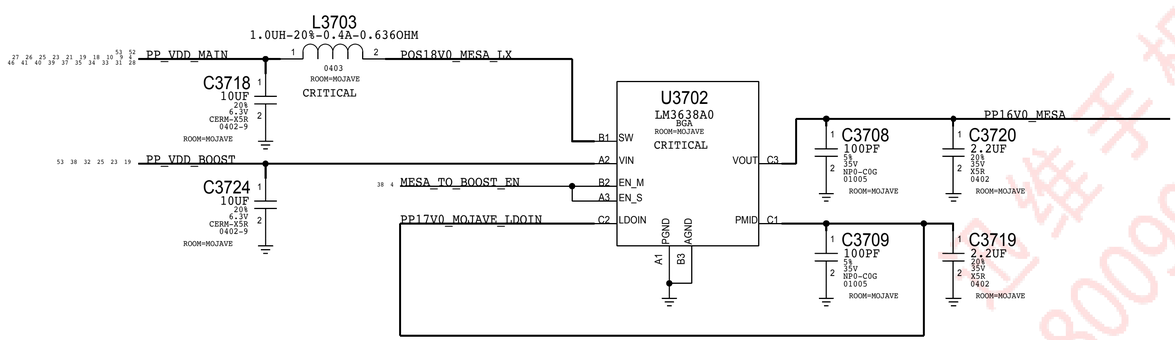

PAGE TITLE	spare
DRAWING NUMBER	051-00419
SIZE	D
REVISION	8.0.0
BRANCH	
PAGE	6 OF 53
SHEET	6 OF 81

迅维手机维修培训学校 4008009990 www.xinxunwei.com

MESA POWER

FL3803
80-OHM-25%-0.52A-0.17OHM
0201
ROOM=MAMBA_MESA

PP3V0_MESA — PP3V0_MESA_CONN

C3813 2.2UF 20% 6.3V X5R-CERM 0201-1 ROOM=MAMBA_MESA
C3815 2.2UF 20% 6.3V X5R-CERM 0201-1 ROOM=MAMBA_MESA
C3821 2.2UF 20% 6.3V X5R-CERM 0201-1 ROOM=MAMBA_MESA
C3822 0.1UF 20% 6.3V X5R-CERM 01005 ROOM=MAMBA_MESA
C3804 220PF 5% 10V C0G-CERM 01005 ROOM=MAMBA_MESA

FL3801
1500HM-25%-200MA-0.7DCR
01005
ROOM=MAMBA_MESA

PP1V8_MESA — PP1V8_MESA_CONN

C3814 2.2UF 20% 6.3V X5R-CERM 0201-1 ROOM=MAMBA_MESA
C3802 220PF 5% 10V C0G-CERM 01005 ROOM=MAMBA_MESA

FL3802
1500HM-25%-200MA-0.7DCR
01005
ROOM=MAMBA_MESA

PP16V0_MESA — PP16V0_MESA_CONN

C3803 100PF 5% 16V NP0-C0G 01005 ROOM=MAMBA_MESA

MESA DIGITAL I/O

FL3807
1500HM-25%-200MA-0.7DCR
01005
ROOM=MAMBA_MESA

SPI_AP_TO_MESA_MOSI — SPI_AP_TO_MESA_MOSI_CONN

R3807 511K 1% 1/32W MF 01005 ROOM=MAMBA_MESA
C3816 56PF 5% 25V NP0-C0G-CERM 01005 ROOM=MAMBA_MESA

R3809 0.00 0% 1/32W MF 01005 ROOM=MAMBA_MESA

SPI_AP_TO_MESA_SCLK — SPI_AP_TO_MESA_SCLK_CONN

R3808 511K 1% 1/32W MF 01005 ROOM=MAMBA_MESA
C3817 56PF 5% 25V NP0-C0G-CERM 01005 ROOM=MAMBA_MESA

R3811 33.2 1% 1/32W MF 01005 ROOM=MAMBA_MESA

SPI_MESA_TO_AP_MISO — SPI_MESA_TO_AP_MISO_CONN

C3818 56PF 5% 25V NP0-C0G-CERM 01005 ROOM=MAMBA_MESA

R3801 681 1% 1/32W MF 01005 ROOM=MAMBA_MESA

MESA_TO_AP_INT — MESA_TO_AP_INT_CONN

C3819 100PF 5% 16V NP0-C0G 01005 ROOM=MAMBA_MESA

R3802 681 1% 1/32W MF 01005 ROOM=MAMBA_MESA

MESA_TO_BOOST_EN — MESA_TO_BOOST_EN_CONN

C3801 100PF 5% 16V NP0-C0G 01005 ROOM=MAMBA_MESA

FL3811
1500HM-25%-200MA-0.7DCR
01005

AOP_TO_MESA_BLANKING_EN — AOP_TO_MESA_BLANKING_EN_CONN

C3825 56PF 5% 25V NP0-C0G-CERM 01005 ROOM=MAMBA_MESA

MAMBA AND MESA CONNECTOR

MLB: 516S00141 (RCPT)
FLEX: 516S00142 (PLUG)

CRITICAL
J3801
BB35C-RA24-3A
F-ST-SM

Matches flex_x452_acf, schematic revision 1.5.0 pinout

PP3V0_MESA_CONN	2	1	PP1V8_MESA_CONN
	4	3	
	6	5	MESA_TO_AOP_FDINT_CONN
PP16V0_MESA_CONN	8	7	I2C_MESA_TURTLE_SDA_CONN
GUARD	10	9	I2C_MESA_TURTLE_SCL_CONN
MAMBA_TO_LCM_MDRIVE_CONN_MESA	12	11	MESA_TO_BOOST_EN_CONN
	14	13	MESA_TO_AP_INT_CONN
AP_TO_TOUCH_MAMBA_RESET_CONN_L	16	15	SPI_AP_TO_MESA_SCLK_CONN
TP_MAMBA_HINT_L	18	17	SPI_AP_TO_MESA_MOSI_CONN
I2C_TOUCH_BI_MAMBA_SDA	20	19	AOP_TO_MESA_BLANKING_EN_CONN
I2C_TOUCH_TO_MAMBA_SCL	22	21	SPI_MESA_TO_AP_MISO_CONN
PP1V8_TOUCH_TO_MAMBA_CONN	24	23	PP2V75_MAMBA_CONN
	28	27	
		30	

ROOM=MAMBA_MESA

LCM_TO_MAMBA_MSYNC_CONN

C3807 56PF 5% 25V NP0-C0G-CERM 01005 ROOM=MAMBA_MESA

P2MM-NSM SM
PP3801

MAMBA POWER

NOTE: OUTPUT IMPEDANCE MUST BE >0.005-OHM
IN ORDER TO MEET CAP ESR REQUIREMENT PER LDO SPEC.
VENDOR ALSO RECOMMENDS CIN = COUT FOR STABILITY

TI:353S00576
ST:353S00932

PP_VDD_BOOST

C3828 2.2UF 20% 6.3V X5R-CERM 0201-1 ROOM=MAMBA_MESA

XW3801
SHORT-20L-0.05MM-SM
ROOM=PMU
OMIT

PP1V8_TOUCH — MAMBA_LDO_EN

U3801
LP5907SNX-2.75
X2SON
VIN — VOUT
EN
GND EPAD
ROOM=MAMBA_MESA

PP2V75_MAMBA_CONN

C3823 10UF 20% 10V X5R-CERM 0402-8 ROOM=MAMBA_MESA
C3812 220PF 5% 10V C0G-CERM 01005 ROOM=MAMBA_MESA

PP1V8_TOUCH

R3805 0.00 0% 1/32W MF 01005 ROOM=MAMBA_MESA

PP1V8_TOUCH_TO_MAMBA_CONN

C3824 2.2UF 20% 6.3V X5R-CERM 0201-1 ROOM=MAMBA_MESA
C3811 220PF 5% 10V C0G-CERM 01005 ROOM=MAMBA_MESA

MAMBA DIGITAL I/O

FL3804
1500HM-25%-200MA-0.7DCR
01005
ROOM=MAMBA_MESA

MAMBA_TO_LCM_MDRIVE — MAMBA_TO_LCM_MDRIVE_CONN_MESA

C3805 56PF 5% 25V NP0-C0G-CERM 01005 ROOM=MAMBA_MESA

NOSTUFF
C3806 56PF 5% 25V NP0-C0G-CERM 01005 ROOM=MAMBA_MESA

FL3806
1500HM-25%-200MA-0.7DCR
01005
ROOM=MAMBA_MESA

MESA_TO_AOP_FDINT — MESA_TO_AOP_FDINT_CONN

C3826 100PF 5% 16V NP0-C0G 01005 ROOM=MAMBA_MESA

#24543342: stuff 100pF

PAGE TITLE	spare
DRAWING NUMBER	051-00419
SIZE	D
REVISION	8.0.0
BRANCH	
PAGE	6 OF 53
SHEET	6 OF 81

www.chinafix.com
迅维手机维修培训学校 4008009990 www.xinxunwei.com

DISPLAY POWER

PP5V7_LCM_AVDDH — FL3912 240-OHM-25%-0.42A-0.31DCR (0201, ROOM=DISPLAY_B2B) — PP5V7_LCM_AVDDH_CONN

- C3901 10UF 20% 10V X5R-CERM 0402-8 ROOM=DISPLAY_B2B
- C3929 10UF 20% 10V X5R-CERM 0402-8 ROOM=DISPLAY_B2B
- C3933 2.2UF 20% 6.3V X5R-CERM 0201-1 ROOM=DISPLAY_B2B
- C3913 220PF 5% 10V C0G-CERM 01005 ROOM=DISPLAY_B2B

PP1V8 — FL3906 240-OHM-25%-0.42A-0.31DCR (0201, ROOM=DISPLAY_B2B) — PP1V8_LCM_CONN

- C3934 2.2UF 20% 6.3V X5R-CERM 0201-1 ROOM=DISPLAY_B2B
- C3914 220PF 5% 10V C0G-CERM 01005 ROOM=DISPLAY_B2B

PN5V7_LCM_MESON_AVDDN — FL3908 240-OHM-25%-0.42A-0.31DCR (0201, ROOM=DISPLAY_B2B) — PN5V7_LCM_MESON_AVDDN_CONN

- C3909 220PF 5% 10V C0G-CERM 01005 ROOM=DISPLAY_B2B

PP5V7_MESON_AVDDH — FL3909 240-OHM-25%-0.42A-0.31DCR (0201, ROOM=DISPLAY_B2B) — PP5V7_MESON_AVDDH_CONN

- C3910 220PF 5% 10V C0G-CERM 01005 ROOM=DISPLAY_B2B
- C3940 2.2UF 20% 6.3V X5R-CERM 0201-1 ROOM=DISPLAY_B2B

PP1V8_TOUCH — FL3910 33-OHM-25%-1500MA (0201, ROOM=DISPLAY_B2B) — PP1V8_TOUCH_CONN

- C3932 2.2UF 20% 6.3V X5R-CERM 0201-1 ROOM=DISPLAY_B2B
- C3911 220PF 5% 10V C0G-CERM 01005 ROOM=DISPLAY_B2B

PP5V1_TOUCH_VDDH — FL3911 240-OHM-25%-0.42A-0.31DCR (0201, ROOM=DISPLAY_B2B) — PP5V1_TOUCH_VDDH_CONN

- C3912 220PF 5% 10V C0G-CERM 01005 ROOM=DISPLAY_B2B

BACKLIGHT

PP_LCM_BL_ANODE — FL3901 33-OHM-25%-1500MA (0201, ROOM=DISPLAY_B2B) — PP_LCM_BL_ANODE_CONN (VOLTAGE=25.0V)

- NOSTUFF C3903 220PF 5% 50V C0G 0201 ROOM=DISPLAY_B2B

#26634069: nostuff C3903 to help desense

PP_LCM_BL_CAT1 — FL3902 33-OHM-25%-1500MA (0201, ROOM=DISPLAY_B2B) — PP_LCM_BL_CAT1_CONN

- C3904 100PF 5% 35V NP0-C0G 01005 ROOM=DISPLAY_B2B

PP_LCM_BL_CAT2 — FL3903 33-OHM-25%-1500MA (0201, ROOM=DISPLAY_B2B) — PP_LCM_BL_CAT2_CONN

- C3905 100PF 5% 35V NP0-C0G 01005 ROOM=DISPLAY_B2B

DISPLAY MIPI

- 90_MIPI_AP_TO_LCM_CLK_P — L3901 (650HM-0.7-2GHZ-3.4OHM TAM0605, CRITICAL) — 90_MIPI_AP_TO_LCM_CLK_CONN_P
- 90_MIPI_AP_TO_LCM_CLK_N — 90_MIPI_AP_TO_LCM_CLK_CONN_N (ROOM=DISPLAY_B2B)
- 90_MIPI_AP_TO_LCM_DATA0_P — L3902 (650HM-0.7-2GHZ-3.4OHM TAM0605, CRITICAL) — 90_MIPI_AP_TO_LCM_DATA0_CONN_P
- 90_MIPI_AP_TO_LCM_DATA0_N — 90_MIPI_AP_TO_LCM_DATA0_CONN_N (ROOM=DISPLAY_B2B)
- 90_MIPI_AP_TO_LCM_DATA1_P — L3903 (650HM-0.7-2GHZ-3.4OHM TAM0605, CRITICAL) — 90_MIPI_AP_TO_LCM_DATA1_CONN_P
- 90_MIPI_AP_TO_LCM_DATA1_N — 90_MIPI_AP_TO_LCM_DATA1_CONN_N (ROOM=DISPLAY_B2B)

LCM_TO_CHESTNUT_PWR_EN — FL3913 150OHM-25%-200MA-0.7DCR (01005, ROOM=DISPLAY_B2B) — LCM_TO_CHESTNUT_PWR_EN_CONN

- C3916 220PF 5% 10V C0G-CERM 01005 ROOM=DISPLAY_B2B

AP_TO_LCM_RESET_L — FL3915 150OHM-25%-200MA-0.7DCR (01005) — AP_TO_LCM_RESET_CONN_L

- R3901 100K 5% 1/32W MF 01005 ROOM=DISPLAY_B2B
- C3917 220PF 5% 10V C0G-CERM 01005 ROOM=DISPLAY_B2B

PMU_TO_LCM_PANICB — R3915 10 5% 1/32W MF 01005 ROOM=DISPLAY_B2B — PMU_TO_LCM_PANICB_CONN

- C3918 100PF 5% 16V NP0-C0G 01005 ROOM=DISPLAY_B2B

AOP/TOUCH INTERFACE

LCM_TO_MANY_BSYNC — FL3916 150OHM-25%-200MA-0.7DCR (01005, ROOM=DISPLAY_B2B) — LCM_TO_MANY_BSYNC_CONN

- C3919 56PF 5% 25V NP0-C0G-CERM 01005 ROOM=DISPLAY_B2B

UART_TOUCH_TO_AOP_RXD — FL3917 150OHM-25%-200MA-0.7DCR (01005, ROOM=DISPLAY_B2B) — UART_TOUCH_TO_AOP_RXD_CONN

- C3920 56PF 5% 25V NP0-C0G-CERM 01005 ROOM=DISPLAY_B2B

UART_AOP_TO_TOUCH_TXD — FL3918 150OHM-25%-200MA-0.7DCR (01005, ROOM=DISPLAY_B2B) — UART_AOP_TO_TOUCH_TXD_CONN

- C3921 56PF 5% 25V NP0-C0G-CERM 01005 ROOM=DISPLAY_B2B

AP/TOUCH INTERFACE

AP_TO_TOUCH_MAMBA_RESET_L — FL3904 150OHM-25%-200MA-0.7DCR (01005, ROOM=DISPLAY_B2B) — AP_TO_TOUCH_MAMBA_RESET_CONN_L

- C3915 220PF 5% 10V C0G-CERM 01005 ROOM=DISPLAY_B2B — To Display B2B
- C3902 220PF 5% 10V C0G-CERM 01005 ROOM=MAMBA_MESA — To Mamba/Mesa B2B

SPI_AP_TO_TOUCH_CS_L — FL3922 150OHM-25%-200MA-0.7DCR (01005, ROOM=DISPLAY_B2B) — SPI_AP_TO_TOUCH_CS_CONN_L

- C3924 56PF 5% 25V NP0-C0G-CERM 01005 ROOM=DISPLAY_B2B

SPI_AP_TO_TOUCH_SCLK — R3923 0.00 5% 1/32W MF 01005 ROOM=DISPLAY_B2B — SPI_AP_TO_TOUCH_SCLK_CONN

- NOSTUFF C3922 56PF 5% 25V NP0-C0G-CERM 01005 ROOM=DISPLAY_B2B
- C3923 56PF 5% 25V NP0-C0G-CERM 01005 ROOM=DISPLAY_B2B

SPI_AP_TO_TOUCH_MOSI — FL3924 150OHM-25%-200MA-0.7DCR (01005, ROOM=DISPLAY_B2B) — SPI_AP_TO_TOUCH_MOSI_CONN

- C3925 56PF 5% 25V NP0-C0G-CERM 01005 ROOM=DISPLAY_B2B

SPI_TOUCH_TO_AP_MISO — FL3919 150OHM-25%-200MA-0.7DCR (01005, ROOM=DISPLAY_B2B) — SPI_TOUCH_TO_AP_MISO_CONN

- C3926 56PF 5% 25V NP0-C0G-CERM 01005 ROOM=DISPLAY_B2B

TOUCH_TO_AP_INT_L — FL3920 150OHM-25%-200MA-0.7DCR (01005, ROOM=DISPLAY_B2B) — TOUCH_TO_AP_INT_L_CONN

- C3927 100PF 5% 16V NP0-C0G 01005 ROOM=DISPLAY_B2B

AP_TO_CUMULUS_CLK32K — R3908 33.2 1% 1/32W MF 01005 ROOM=DISPLAY_B2B — AP_TO_CUMULUS_CLK_32K_CONN

- C3928 100PF 5% 16V NP0-C0G 01005 ROOM=DISPLAY_B2B

AC Coupling Caps

PP_VDD_MAIN

- C3930 220PF 5% 10V C0G-CERM 01005 ROOM=DISPLAY_B2B
- C3931 220PF 5% 10V C0G-CERM 01005 ROOM=DISPLAY_B2B
- C3935 220PF 5% 10V C0G-CERM 01005 ROOM=DISPLAY_B2B
- C3936 220PF 5% 10V C0G-CERM 01005 ROOM=DISPLAY_B2B

AC return path for LCM MIPI which is referenced to GND and VDD_MAIN

- C3937 220PF 5% 10V C0G-CERM 01005 ROOM=DISPLAY_B2B
- C3938 220PF 5% 10V C0G-CERM 01005 ROOM=DISPLAY_B2B
- C3939 220PF 5% 10V C0G-CERM 01005

For placement "along the way" as we route from SOC to B2B.

PAGE TITLE	spare
DRAWING NUMBER	051-00419
SIZE	D
REVISION	8.0.0
BRANCH	
PAGE	6 OF 53
SHEET	6 OF 81

www.chinafix.com
www.xinxunwei.com
4008009990 维修手机维修培训学校

TRISTAR 2

z=0.45mm

<rdar://24285280> EVT: 343S00091 (P2:343S00078)

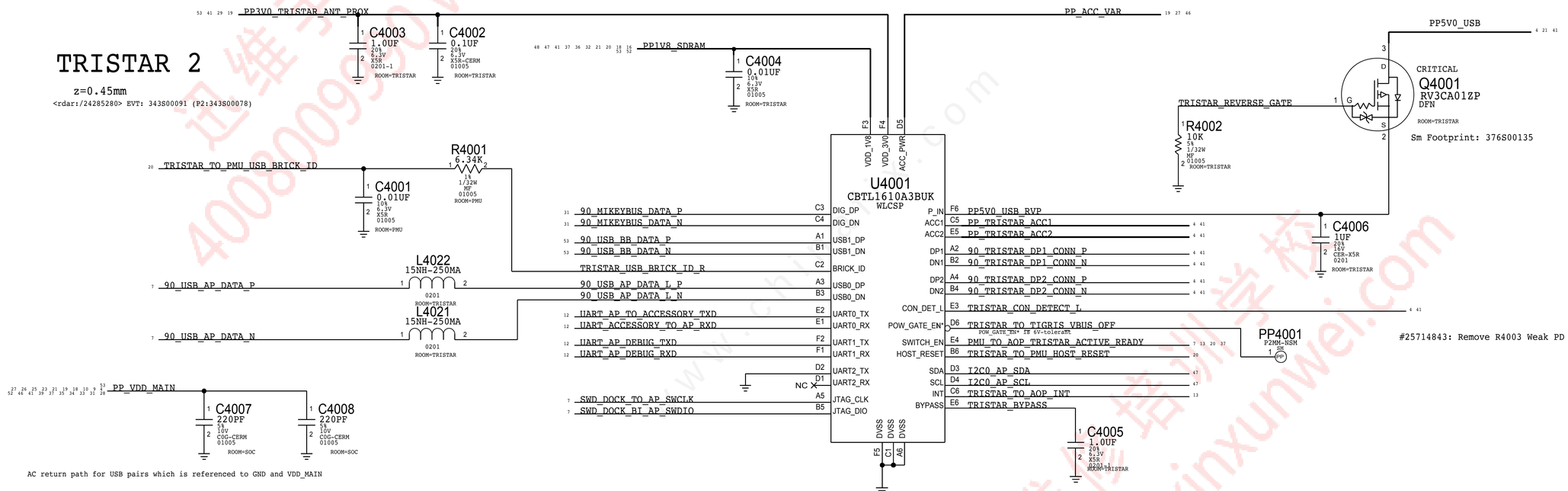

AC return path for USB pairs which is referenced to GND and VDD_MAIN

#25714843: Remove R4003 Weak PD

PAGE TITLE	spare
DRAWING NUMBER	051-00419
SIZE	D
REVISION	8.0.0
BRANCH	
PAGE	6 OF 53
SHEET	6 OF 81

迅维手机维修培训学校 www.xinxunwei.com 4008009990

ANTENNA

Please loop in Matt Mow (Antenna Team)
when changing these components!

FL4103
150OHM-25%-200MA-0.7DCR
01005
ROOM=DOCK_B2B

PP3V0_LAT_CONN

C4134
220PF
5%
10V
C0G-CERM
01005
ROOM=DOCK_B2B

FL4107
150OHM-25%-200MA-0.7DCR
01005
ROOM=DOCK_B2B

53 40 29 19 PP3V0_TRISTAR_ANT_PROX

PP3V0_LAT1_CONN 41
VOLTAGE=3.0V

C4119
220PF
5%
10V
C0G-CERM
01005
ROOM=DOCK_B2B

FL4108
150OHM-25%-200MA-0.7DCR
01005
ROOM=DOCK_B2B

PP1V8_SDRAM

PP1V8_LAT_ARC_CONN 41

C4120
220PF
5%
10V
C0G-CERM
01005
ROOM=DOCK_B2B

53 BB_TO_LAT_ANT_SCLK

R4109
0.00
0%
1/32W
MF
01005
ROOM=DOCK_B2B

BB_TO_LAT_ANT_SCLK_CONN 41

C4121
33PF
5%
16V
NP0-C0G-CERM
01005
ROOM=DOCK_B2B

53 BB_TO_LAT_ANT_DATA

R4110
0.00
0%
1/32W
MF
01005
ROOM=DOCK_B2B

BB_TO_LAT_ANT_DATA_CONN 41

C4122
33PF
5%
16V
NP0-C0G-CERM
01005
ROOM=DOCK_B2B

ARC CONTROL

#26118161: Update FL4104 to 49.9ohm

47 36 I2C_HOMER_SCL

R4104
49.9
1%
1/32W
MF
01005
ROOM=DOCK_B2B

I2C_HOMER_SCL_CONN 41
CKPLUS_WAIVE=I2C_PULLUP

C4135
56PF
5%
25V
NP0-C0G-CERM
01005
ROOM=DOCK_B2B

FL4112
150OHM-25%-200MA-0.7DCR
01005

47 36 I2C_HOMER_SDA

I2C_HOMER_SDA_CONN 41
CKPLUS_WAIVE=I2C_PULLUP

C4136
56PF
5%
25V
NP0-C0G-CERM
01005
ROOM=DOCK_B2B

ARC1

41 35 ARC1_TO_SOLENOID1_OUT_POS

41 35 ARC1_TO_SOLENOID1_OUT_NEG

C4101
220PF
5%
10V
C0G-CERM
01005
ROOM=DOCK_B2B

C4102
220PF
5%
10V
C0G-CERM
01005
ROOM=DOCK_B2B

Antenna GPIO

FL4101
150OHM-25%-200MA-0.7DCR
01005
ROOM=DOCK_B2B

53 BB_TO_LAT_GPO1

BB_TO_LAT_GPO1_CONN 41

C4110
56PF
5%
25V
NP0-C0G-CERM
01005
ROOM=DOCK_B2B

FL4102
150OHM-25%-200MA-0.7DCR
01005
ROOM=DOCK_B2B

53 BB_TO_LAT_GPO2

BB_TO_LAT_GPO2_CONN 41

C4111
56PF
5%
25V
NP0-C0G-CERM
01005
ROOM=DOCK_B2B

Per ANT Erdinc, change to cap

LOWER MIC1/4

FL4116
150OHM-25%-200MA-0.7DCR
01005
ROOM=DOCK_B2B

31 LOWERMIC1_TO_CODEC_AIN1_P

LOWERMIC1_TO_CODEC_AIN1_CONN_POS 41

C4128
56PF
5%
25V
NP0-C0G-CERM
01005
ROOM=DOCK_B2B

FL4117
150OHM-25%-200MA-0.7DCR
01005
ROOM=DOCK_B2B

31 LOWERMIC1_TO_CODEC_AIN1_N

LOWERMIC1_TO_CODEC_AIN1_CONN_NEG 41

C4129
56PF
5%
25V
NP0-C0G-CERM
01005
ROOM=DOCK_B2B

FL4118
150OHM-25%-200MA-0.7DCR
01005
ROOM=DOCK_B2B

32 PP_CODEC_TO_LOWERMIC1_BIAS

PP_CODEC_TO_LOWERMIC1_BIAS_CONN 41

C4130
220PF
5%
10V
C0G-CERM
01005
ROOM=DOCK_B2B

FL4119
150OHM-25%-200MA-0.7DCR
01005
ROOM=DOCK_B2B

31 LOWERMIC4_TO_CODEC_AIN2_P

LOWERMIC4_TO_CODEC_AIN2_CONN_POS 41

C4131
56PF
5%
25V
NP0-C0G-CERM
01005
ROOM=DOCK_B2B

FL4120
150OHM-25%-200MA-0.7DCR
01005
ROOM=DOCK_B2B

31 LOWERMIC4_TO_CODEC_AIN2_N

LOWERMIC4_TO_CODEC_AIN2_CONN_NEG 41

C4132
56PF
5%
25V
NP0-C0G-CERM
01005
ROOM=DOCK_B2B

FL4121
150OHM-25%-200MA-0.7DCR
01005
ROOM=DOCK_B2B

32 PP_CODEC_TO_LOWERMIC4_BIAS

PP_CODEC_TO_LOWERMIC4_BIAS_CONN 41

C4133
220PF
5%
10V
C0G-CERM
01005
ROOM=DOCK_B2B

SPEAKER1

FL4114
150OHM-25%-200MA-0.7DCR
01005
ROOM=DOCK_B2B

34 SPEAKER_TO_SPEAKERAMP1_VSENSE_P

SPEAKER_TO_SPEAKERAMP1_VSENSE_CONN_POS 41

C4126
220PF
5%
10V
C0G-CERM
01005
ROOM=DOCK_B2B

FL4115
150OHM-25%-200MA-0.7DCR
01005
ROOM=DOCK_B2B

34 SPEAKER_TO_SPEAKERAMP1_VSENSE_N

SPEAKER_TO_SPEAKERAMP1_VSENSE_CONN_NEG 41

C4127
220PF
5%
10V
C0G-CERM
01005
ROOM=DOCK_B2B

41 34 SPEAKERAMP1_TO_SPEAKER_OUT_POS

C4103
220PF
5%
10V
C0G-CERM
01005
ROOM=DOCK_B2B

41 34 SPEAKERAMP1_TO_SPEAKER_OUT_NEG

C4104
220PF
5%
10V
C0G-CERM
01005
ROOM=DOCK_B2B

VOLTAGE=14.0V

40 21 4 PP5V0_USB

C4109
0.1UF
10%
25V
X5R
0201
ROOM=DOCK_B2B

C4105
0.1UF
10%
25V
X5R
0201
ROOM=DOCK_B2B

C4106
0.1UF
10%
25V
X5R
0201
ROOM=DOCK_B2B

C4107
330PF
10%
16V
CER-X7R
01005
ROOM=DOCK_B2B

C4108
330PF
10%
16V
CER-X7R
01005
ROOM=DOCK_B2B

J4101
245857
F-ST-SM

#25429221:Carrier Dock flex to add +1 ACC2 pin

#22499940:Change Net Name to POS/NEG

41 34	SPEAKERAMP1_TO_SPEAKER_OUT_NEG	1	2	
41	SPEAKER_TO_SPEAKERAMP1_VSENSE_CONN_NEG	3	4	
46	BB_TO_LAT_GPO3_CONN	5	6	PP_TRISTAR_ACC2_CONN 41
41	LOWERMIC4_TO_CODEC_AIN2_CONN_NEG	7	8	BB_TO_LAT_GPO2_CONN 41
41	PP_CODEC_TO_LOWERMIC4_BIAS_CONN	9	10	LOWERMIC4_TO_CODEC_AIN2_CONN_POS 41
41	PP_TRISTAR_ACC1_CONN	11	12	LOWERMIC4_TO_CODEC_BIAS_FILT_RET 32
		13	14	BB_TO_LAT_GPO1_CONN 41
40 4	90_TRISTAR_DP2_CONN_P	15	16	BB_TO_LAT_ANT_SCLK_CONN 41
40 4	90_TRISTAR_DP2_CONN_N	17	18	BB_TO_LAT_ANT_DATA_CONN 41
		19	20	PP1V8_LAT_ARC_CONN 41
40 4	90_TRISTAR_DP1_CONN_N	21	22	PP3V0_LAT1_CONN 41
40 4	90_TRISTAR_DP1_CONN_P	23	24	
		25	26	
31	MIKEYBUS_REFERENCE	27	28	
41	LOWERMIC1_TO_CODEC_AIN1_CONN_POS	29	30	LOWERMIC1_TO_CODEC_AIN1_CONN_NEG 41
32	LOWERMIC1_TO_CODEC_BIAS_FILT_RET	31	32	PP_CODEC_TO_LOWERMIC1_BIAS_CONN 41
		33	34	TRISTAR_CON_DETECT_CONN_L 41
47	I2C_MIC1_SDA_CONN	35	36	
47	I2C_MIC1_SCL_CONN	37	38	
		39	40	ARC1_TO_SOLENOID1_OUT_NEG 35 41
41 35	ARC1_TO_SOLENOID1_OUT_POS	41	42	ARC1_TO_SOLENOID1_OUT_POS 35 41
35	SOLENOID1_TO_ARC1_VSENSE_POS	43	44	SOLENOID1_TO_ARC1_VSENSE_NEG 35
41	PP3V0_LAT_CONN	45	46	I2C_HOMER_SDA_CONN 41
41	SPEAKER_TO_SPEAKERAMP1_VSENSE_CONN_POS	47	48	I2C_HOMER_SCL_CONN 41
41 34	SPEAKERAMP1_TO_SPEAKER_OUT_POS	51	52	
		54		

DOCK FLEX CONNECTOR

TRISTAR

40 4 TRISTAR_CON_DETECT_L

R4102
1.00K
5%
1/32W
MF
01005
ROOM=DOCK_B2B

TRISTAR_CON_DETECT_CONN_L 41

C4116
27PF
5%
16V
NP0-C0G
01005
ROOM=DOCK_B2B

FL4105
10-OHM-1.1A
01005
ROOM=DOCK_B2B

40 4 PP_TRISTAR_ACC1

PP_TRISTAR_ACC1_CONN 41
VOLTAGE=4.3V

C4117
100PF
5%
16V
NP0-C0G
01005
ROOM=DOCK_B2B

FL4106
22-OHM-25%-1800MA
0201
ROOM=DOCK_B2B
#25098110: Decrease DCR

40 4 PP_TRISTAR_ACC2

PP_TRISTAR_ACC2_CONN 41
VOLTAGE=4.3V

C4118
100PF
5%
16V
NP0-C0G
01005
ROOM=DOCK_B2B

USB AC Coupling

AC return path for USB pairs which is referenced to GND and VDD_MAIN

27 26 25 23 21 19 18 10 53 4
52 46 40 39 37 35 34 33 31 28 PP_VDD_MAIN

C4143
220PF
5%
10V
C0G-CERM
01005
ROOM=DOCK

PAGE TITLE	spare
DRAWING NUMBER	051-00419
SIZE	D
REVISION	8.0.0
BRANCH	
PAGE	6 OF 53
SHEET	6 OF 81

CHINAFIX
www.chinafix.com
4008009990 www.xinxunwei.com 迅维手机维修培训学校

迅维手机维修培训学校 4008009990 www.xinxunwei.com
www.chinafix.com
迅维手机维修培训学校 4008009990 www.xinxunwei.com

PAGE TITLE
spare

DRAWING NUMBER 051-00419	SIZE D
REVISION 8.0.0	
BRANCH	
PAGE 6 OF 53	
SHEET 6 OF 81	

迅维手机维修培训学校 4008009990 www.xinxunwei.com
www.chinafix.com
迅维手机维修培训学校 4008009990 www.xinxunwei.com

PAGE TITLE
spare

DRAWING NUMBER 051-00419	SIZE D
REVISION 8.0.0	
BRANCH	
PAGE 6 OF 53	
SHEET 6 OF 81	

STROBE1

PP_STROBE_DRIVER1_WARM_LED (26 45)
- C4402 220PF 5% 10V COG-CERM 01005 ROOM=RIGHT_BUTTON
- C4409 27PF 5% 16V NP0-C0G 01005 ROOM=RIGHT_BUTTON

PP_STROBE_DRIVER1_COOL_LED (26 45)
- C4406 220PF 5% 10V COG-CERM 01005 ROOM=RIGHT_BUTTON
- C4408 27PF 5% 16V NP0-C0G 01005 ROOM=RIGHT_BUTTON

STROBE_MODULE_NTC (26) — FL4404 1500HM-25%-200MA-0.7DCR 01005 ROOM=RIGHT_BUTTON — STROBE_MODULE_NTC_CONN (45)
- R4401 27K 0.5% 1/32W MF 01005 ROOM=RIGHT_BUTTON
- C4407 220PF 5% 10V COG-CERM 01005 ROOM=RIGHT_BUTTON

#24544474: Can R4401 be changed to 5%?

STROBE2

PP_STROBE_DRIVER2_WARM_LED (26 45)
- C4410 220PF 5% 10V COG-CERM 01005 ROOM=RIGHT_BUTTON
- C4413 27PF 5% 16V NP0-C0G 01005 ROOM=RIGHT_BUTTON

PP_STROBE_DRIVER2_COOL_LED (26 45)
- C4411 220PF 5% 10V COG-CERM 01005 ROOM=RIGHT_BUTTON
- C4412 27PF 5% 16V NP0-C0G 01005 ROOM=RIGHT_BUTTON

HAWKING

#24678255:DOE with 10% and/20% cap

HAWKING_TO_CODEC_AIN7_N (31) — C4417 0.22UF 20% 6.3V X5R 01005 ROOM=RIGHT_BUTTON — HAWKING_TO_CODEC_AIN7_N_CONN (45)

HAWKING_TO_CODEC_AIN7_P (31) — C4421 0.22UF 20% 6.3V X5R 01005 ROOM=RIGHT_BUTTON — HAWKING_TO_CODEC_AIN7_C_P (CKPLUS_WAIVE=MISS_N_DIFFPAIR) — FL4405 1500HM-25%-200MA-0.7DCR 01005 ROOM=RIGHT_BUTTON — HAWKING_TO_CODEC_AIN7_P_CONN (45)
- C4415 56PF 5% 25V NP0-C0G-CERM 01005 ROOM=RIGHT_BUTTON
- NOSTUFF C4422 180PF 10% 10V CERM 01005 ROOM=RIGHT_BUTTON

PP1V8_HAWKING (19) — FL4406 1500HM-25%-200MA-0.7DCR 01005 ROOM=RIGHT_BUTTON — PP1V8_HAWKING_CONN (45)
- C4416 2.2UF 20% 6.3V X5R-CERM 0201-1 ROOM=RIGHT_BUTTON
- C4414 220PF 5% 10V COG-CERM 01005 ROOM=RIGHT_BUTTON

MIC2 (ANC REF)

PP_CODEC_TO_REARMIC2_BIAS (32) — FL4403 1500HM-25%-200MA-0.7DCR 01005 ROOM=RIGHT_BUTTON — PP_CODEC_TO_REARMIC2_BIAS_CONN (45)
- C4403 220PF 5% 10V COG-CERM 01005 ROOM=RIGHT_BUTTON

REARMIC2_TO_CODEC_AIN3_P (31) — FL4401 1500HM-25%-200MA-0.7DCR 01005 ROOM=RIGHT_BUTTON — REARMIC2_TO_CODEC_AIN3_CONN_P (45)
- C4404 56PF 5% 25V NP0-C0G-CERM 01005 ROOM=RIGHT_BUTTON

REARMIC2_TO_CODEC_AIN3_N (31) — FL4402 1500HM-25%-200MA-0.7DCR 01005 ROOM=RIGHT_BUTTON — REARMIC2_TO_CODEC_AIN3_CONN_N (45)
- C4405 56PF 5% 25V NP0-C0G-CERM 01005 ROOM=RIGHT_BUTTON

BUTTONS

BUTTON_POWER_KEY_L (20) — R4402 100 5% 1/32W MF 01005 ROOM=RIGHT_BUTTON — BUTTON_POWER_KEY_CONN_L (45)
- C4401 27PF 5% 6.3V NP0-C0G 0201 ROOM=RIGHT_BUTTON
- DZ4401 0201 5.5V-6.2PF ROOM=RIGHT_BUTTON — CHASSIS_GND_BS401 (4 44)

BUTTON_RINGER_A (20) — FL4407 120-OHM-0.220A 01005 ROOM=LEFT_BUTTON — BUTTON_RINGER_A_CONN (45)
- C4418 27PF 5% 6.3V NP0-C0G 0201 ROOM=LEFT_BUTTON
- DZ4402 0201 5.5V-6.2PF ROOM=LEFT_BUTTON — CHASSIS_GND_BS401 (4 44)

BUTTON_VOL_DOWN_L (20) — R4405 100 5% 1/32W MF 01005 ROOM=LEFT_BUTTON — BUTTON_VOL_DOWN_CONN_L (45)
- C4419 100PF 5% 16V NP0-C0G 01005 ROOM=LEFT_BUTTON
- DZ4403 12V-33PF 01005-1 ROOM=LEFT_BUTTON — CHASSIS_GND_BS401 (4 44)

BUTTON_VOL_UP_L (20 12) — R4406 100 5% 1/32W MF 01005 ROOM=LEFT_BUTTON — BUTTON_VOL_UP_CONN_L (45)
- C4420 100PF 5% 16V NP0-C0G 01005 ROOM=LEFT_BUTTON
- DZ4404 12V-33PF 01005-1 ROOM=LEFT_BUTTON — CHASSIS_GND_BS401 (4 44)

PAGE TITLE	spare
DRAWING NUMBER	051-00419
SIZE	D
REVISION	8.0.0
BRANCH	
PAGE	6 OF 53
SHEET	6 OF 81

迅维手机维修培训学校 4008009990 www.xinxunwei.com
www.chinafix.com

THIS PAGE UNIQUE TO SMALL FORM FACTOR

UTAH-C FLEX CONNECTOR

THIS ONE ---> 516S00152 RCPT (USED ON MLB)
516S00151 PLUG

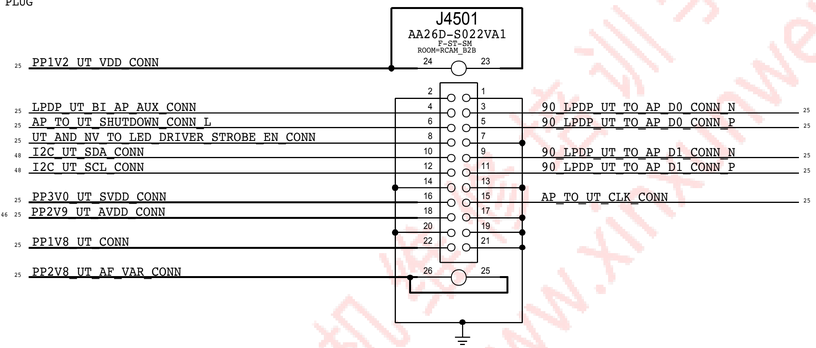

COMBINED BUTTON FLEX CONNECTOR

MLB APN: 516S00150
FLEX APN: 516S00149

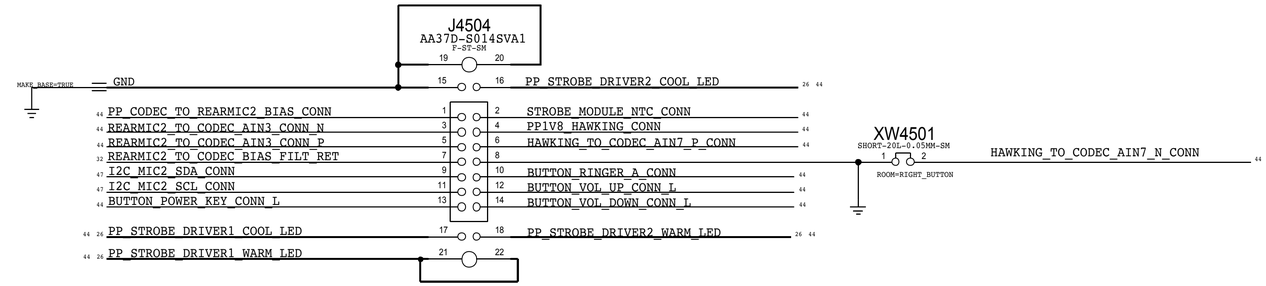

DISPLAY / TOUCH FLEX CONNECTOR

THIS ONE ---> 516S00138 RCPT (USED ON MLB)
516S00137 PLUG

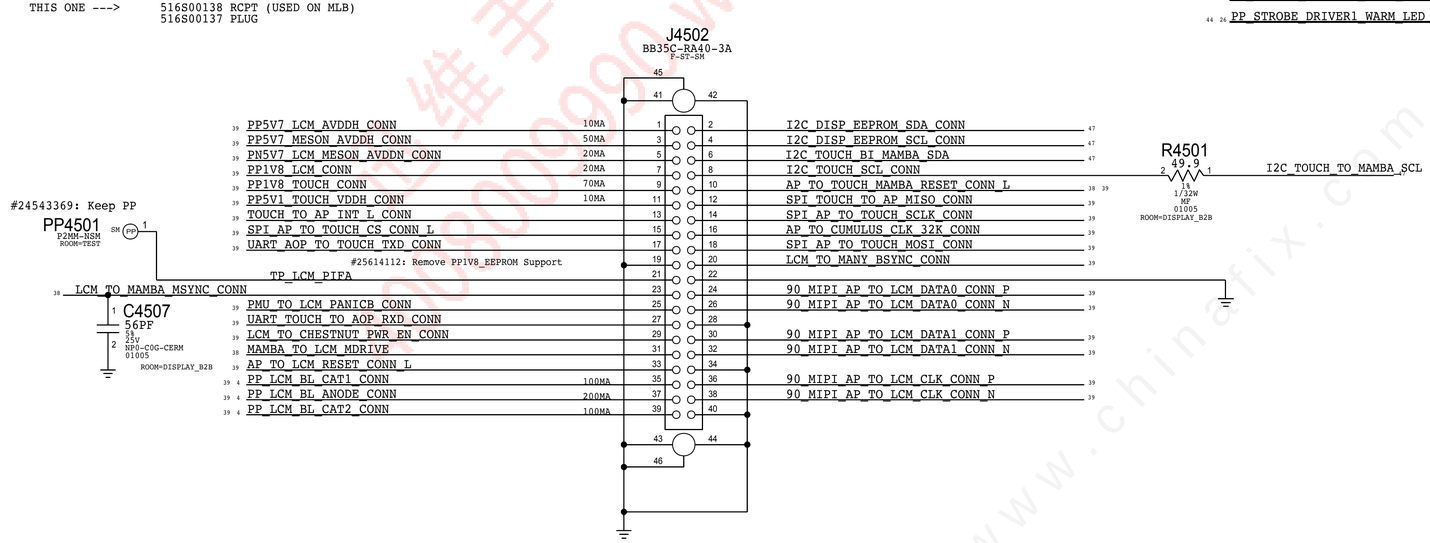

FOREHEAD FLEX CONNECTOR

THIS ONE ---> 516S00146 RCPT (USED ON MLB)
516S00145 PLUG

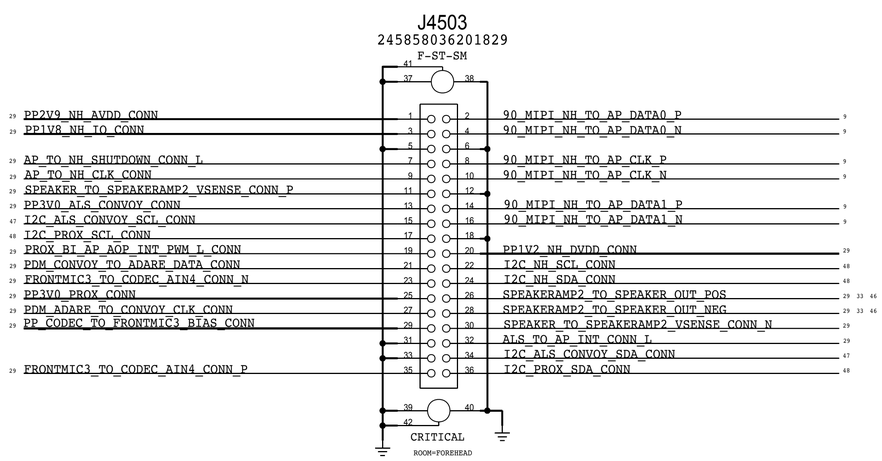

PAGE TITLE	spare
DRAWING NUMBER	051-00419
SIZE	D
REVISION	8.0.0
BRANCH	
PAGE	6 OF 53
SHEET	6 OF 81

迅维手机维修培训学校 www.xinxunwei.com 4008009990 www.chinafix.com

THIS PAGE UNIQUE TO SMALL FORM FACTOR

OTHER SMALL FORM FACTOR SPECIFIC PAGES:

4 - MECHANICAL

ISP I2C1

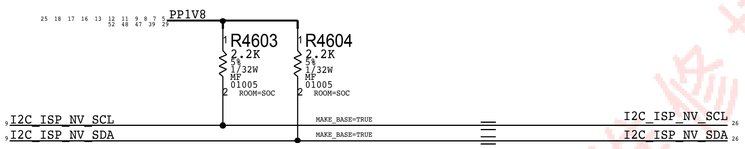

#26682438:Move to Page 46

TOUCH I2C

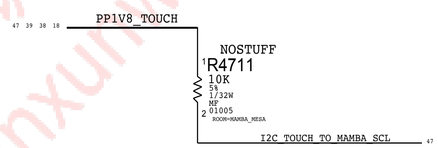

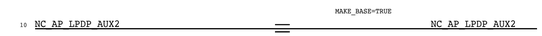

NC Nets in Small FF

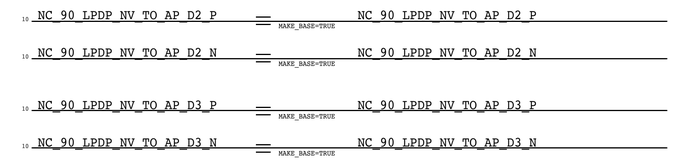

UT B2B

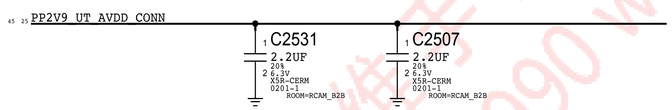

VDD_MAIN Cap

#26634069:D10x Only, 5x VDD_MAIN CAPS Change to 10UF/10V

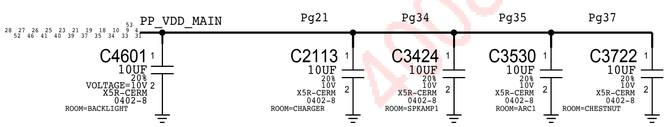

Top Speaker Compass Coil

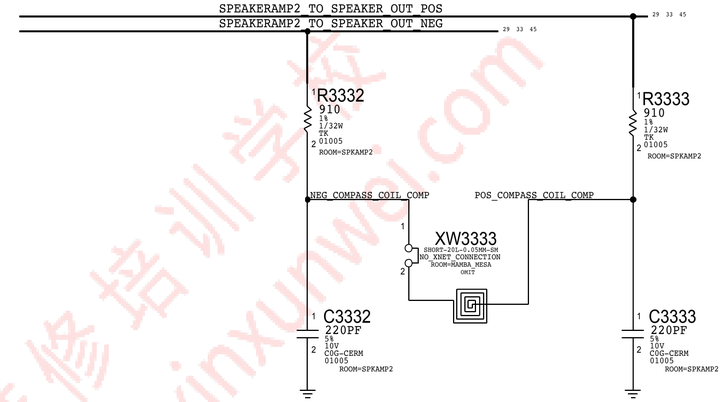

#25742582,Add back C3531 in layout at ARC

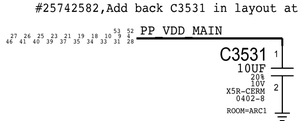

#26104509:C3525 Change to 1UF 0201 in DVT

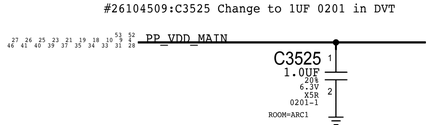

Dock B2B (Pg 41)

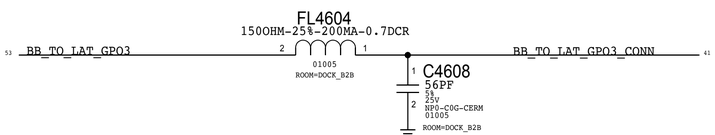

ACC Buck Caps

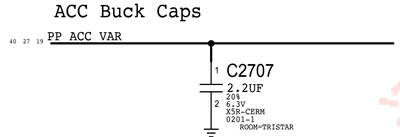

PAGE TITLE	spare
DRAWING NUMBER	051-00419
SIZE	D
REVISION	8.0.0
BRANCH	
PAGE	6 OF 53
SHEET	6 OF 81

迅维手机维修培训学校 4008009990 www.xinxunwei.com
www.chinafix.com

AP

I2C0

PP1V8

R4701 4.02K 1% 1/32W MF 01005 ROOM=SOC
R4702 4.02K 1% 1/32W MF 01005 ROOM=SOC

I2C0_AP_SCL
I2C0_AP_SDA

#24544434

NOSTUFF C4701 56PF 5% 25V NP0-C0G-CERM 01005 ROOM=SOC
NOSTUFF C4702 56PF 5% 25V NP0-C0G-CERM 01005 ROOM=SOC

MAKE_BASE=TRUE

I2C0_AP_SCL
I2C0_AP_SDA
I2C0_AP_SCL
I2C0_AP_SDA
I2C0_AP_SCL
I2C0_AP_SDA
I2C0_AP_SCL
I2C0_AP_SDA

I2C1

PP1V8

R4703 4.02K 1% 1/32W MF 01005 ROOM=SOC
R4704 4.02K 1% 1/32W MF 01005 ROOM=SOC

I2C1_AP_SCL
I2C1_AP_SDA

#24544426

NOSTUFF C4703 56PF 5% 25V NP0-C0G-CERM 01005 ROOM=PMU
NOSTUFF C4704 56PF 5% 25V NP0-C0G-CERM 01005 ROOM=PMU

MAKE_BASE=TRUE

I2C1_AP_SCL
I2C1_AP_SDA
I2C1_AP_SCL
I2C1_AP_SDA

D11/111 ONLY

I2C2

PP1V8

R4705 2.2K 5% 1/32W MF 01005 ROOM=SOC
R4706 2.2K 5% 1/32W MF 01005 ROOM=SOC

I2C2_AP_SCL
I2C2_AP_SDA

MAKE_BASE=TRUE

I2C2_AP_SCL
I2C2_AP_SDA

R4707 0.00 0% 1/32W MF 01005 ROOM=FOREHEAD
R4708 0.00 0% 1/32W MF 01005 ROOM=FOREHEAD

I2C_ALS_CONVOY_SCL_CONN
I2C_ALS_CONVOY_SDA_CONN

C4707 56PF 5% 25V NP0-C0G-CERM 01005 ROOM=FOREHEAD
C4708 56PF 5% 25V NP0-C0G-CERM 01005 ROOM=FOREHEAD

TO FOREHEAD FLEX

TOUCH

PP1V8_TOUCH

NOSTUFF R4712 10K 5% 1/32W MF 01005 ROOM=MAMBA_MESA

#26682438:Move to Page 46

NOTE:MAMBA I2C 2.2K PULL-UPS TO PP1V8_TOUCH INSIDE GALILEO
ADDING R3803, R3804 AS OPTION FOR TWEAKING VALUE

I2C_TOUCH_TO_MAMBA_SCL
I2C_TOUCH_BI_MAMBA_SDA

MAKE_BASE=TRUE

I2C_TOUCH_TO_MAMBA_SCL
I2C_TOUCH_BI_MAMBA_SDA

TO MAMBA / MESA FLEX

NOSTUFF C4709 56PF 5% 25V NP0-C0G-CERM 01005 ROOM=MAMBA_MESA
NOSTUFF C4710 56PF 5% 25V NP0-C0G-CERM 01005 ROOM=MAMBA_MESA

I2C_TOUCH_TO_MAMBA_SCL
I2C_TOUCH_BI_MAMBA_SDA

TO DISPLAY / TOUCH FLEX

C4711 56PF 5% 25V NP0-C0G-CERM 01005 ROOM=DISPLAY_B2B
C4712 56PF 5% 25V NP0-C0G-CERM 01005 ROOM=DISPLAY_B2B

HOMER

PP1V8_SDRAM

R4713 1.00K 5% 1/32W MF 01005 ROOM=HOMER
R4714 1.00K 5% 1/32W MF 01005 ROOM=HOMER

I2C_HOMER_SCL
I2C_HOMER_SDA

I2C5

PP1V8

R4715 2.2K 5% 1/32W MF 01005 ROOM=SOC
R4716 2.2K 5% 1/32W MF 01005 ROOM=SOC

I2C5_SCL
I2C5_SDA

I2C3

PP1V8

R4709 2.2K 5% 1/32W MF 01005 ROOM=SOC
R4710 2.2K 5% 1/32W MF 01005 ROOM=SOC

I2C3_AP_SCL
I2C3_AP_SDA

FL4730 1500HM-25%-200MA-0.7DCR 01005 ROOM=DOCK

ckplus_waive=I2C_PULLUP
I2C_MIC1_SCL_CONN

#26633265:mitigate MIC1 undershoot

FL4729 100 5% 1/32W MF 01005 ROOM=DOCK

CKPLUS_WAIVE=I2C_PULLUP
I2C_MIC1_SDA_CONN

TO DOCK FLEX

C4730 56PF 5% 25V NP0-C0G-CERM 01005 ROOM=DOCK_B2B
C4729 56PF 5% 25V NP0-C0G-CERM 01005 ROOM=DOCK_B2B

FL4732 1500HM-25%-200MA-0.7DCR 01005 ROOM=RIGHT_BUTTON

I2C_MIC2_SCL_CONN
CKPLUS_WAIVE=I2C_PULLUP

FL4731 1500HM-25%-200MA-0.7DCR 01005 ROOM=RIGHT_BUTTON

I2C_MIC2_SDA_CONN
CKPLUS_WAIVE=I2C_PULLUP

TO COMBINED BUTTON FLEX

C4732 56PF 5% 25V NP0-C0G-CERM 01005 ROOM=RIGHT_BUTTON
C4731 56PF 5% 25V NP0-C0G-CERM 01005 ROOM=RIGHT_BUTTON

FL4742 1500HM-25%-200MA-0.7DCR 01005 ROOM=DISPLAY_B2B

I2C_DISP_EEPROM_SCL_CONN

FL4741 1500HM-25%-200MA-0.7DCR 01005 ROOM=DISPLAY_B2B

I2C_DISP_EEPROM_SDA_CONN

TO DISPLAY FLEX

C4742 56PF 5% 25V NP0-C0G-CERM 01005 ROOM=DISPLAY_B2B
C4741 56PF 5% 25V NP0-C0G-CERM 01005 ROOM=DISPLAY_B2B

PAGE TITLE	spare
DRAWING NUMBER	051-00419
SIZE	D
REVISION	8.0.0
BRANCH	
PAGE	6 OF 53
SHEET	6 OF 81

迅维手机维修培训学校 www.xinxunwei.com 4008009990

AOP

I2C

PP1V8_SDRAM

R4801 2.2K 1% 1/32W MF 01005

R4802 2.2K 1% 1/32W MF 01005

C4807 0.1UF 20% 6.3V X5R-CERM 01005 ROOM=SOC

U4802 MAX20312 WLP ROOM=SOC

VCC, B1, A2 IOVCC1, B2 IOVCC2, GND, A1

#24544699: Support 1MHz

I2C_AOP_SCL (MAKE_BASE=TRUE)

I2C_AOP_SDA (MAKE_BASE=TRUE)

I2C_AOP_SCL

I2C_AOP_SDA

I2C_AOP_SCL

I2C_AOP_SDA

FL4815 1500HM-25%-200MA-0.7DCR 01005 ROOM=FOREHEAD

TO FCAM FLEX

I2C_PROX_SCL_CONN (CKPLUS_WAIVE=I2C_PULLUP)

I2C_PROX_SDA_CONN (CKPLUS_WAIVE=I2C_PULLUP)

#24958320:Intentional R4815 Change
Reduce undershoot when Prox Driving

R4815 33.2 1% 1/32W MF 01005 ROOM=FOREHEAD

C4803 56PF 5% 25V NPO-C0G-CERM 01005 ROOM=FOREHEAD

C4804 56PF 5% 25V NPO-C0G-CERM 01005 ROOM=FOREHEAD

Intentional R4815 Change

PP1V8_MESA

R4803 4.7K 1% 1/32W MF 01005 ROOM=MAMBA_MESA

R4804 4.7K 1% 1/32W MF 01005 ROOM=MAMBA_MESA

PP1V8_SDRAM

U4805 74LVC1G3157GX X2SON6 VCC, S, Z, Y0, Y1, GND, NC

I2C_AOP_SCL_ISO

R4806 0.00 0% 1/32W MF 01005 ROOM=MAMBA_MESA

I2C_MESA_TURTLE_SCL_CONN

C4809 56PF 5% 25V NPO-C0G-CERM 01005 ROOM=MAMBA_MESA

AOP_TO_MESA_I2C_ISO_EN

R4805 511K 1% 1/32W MF 01005

PP1V8_SDRAM

U4806 74LVC1G3157GX X2SON6 VCC, S, Z, Y0, Y1, GND, NC

I2C_AOP_SDA_ISO

R4807 0.00 0% 1/32W MF 01005 ROOM=MAMBA_MESA

I2C_MESA_TURTLE_SDA_CONN

C4810 56PF 5% 25V NPO-C0G-CERM 01005 ROOM=MAMBA_MESA

TO MAMBA/MESA FLEX

ISP

I2C0

PP1V8

#24550735: ISP I2C0 PU

R4808 1.00K 5% 1/32W MF 01005 ROOM=SOC

R4809 1.00K 5% 1/32W MF 01005 ROOM=SOC

I2C_ISP_UT_SCL (MAKE_BASE=TRUE)

I2C_ISP_UT_SDA (MAKE_BASE=TRUE)

I2C_ISP_UT_SCL

I2C_ISP_UT_SDA

I2C1

See page 46

R4816 0.00 0% 1/32W MF 01005 ROOM=RCAM_B2B

C4817 56PF 5% 25V NPO-C0G-CERM 01005 ROOM=RCAM_B2B

I2C_UT_SCL_CONN (CKPLUS_WAIVE=I2C_PULLUP)

R4817 0.00 0% 1/32W MF 01005 ROOM=RCAM_B2B

C4816 56PF 5% 25V NPO-C0G-CERM 01005 ROOM=RCAM_B2B

I2C_UT_SDA_CONN (CKPLUS_WAIVE=I2C_PULLUP)

I2C2

PP1V8

R4810 2.2K 1% 1/32W MF 01005 ROOM=SOC

R4811 2.2K 1% 1/32W MF 01005 ROOM=SOC

I2C_ISP_NH_SCL (MAKE_BASE=TRUE)

I2C_ISP_NH_SDA (MAKE_BASE=TRUE)

R4812 0.00 0% 1/32W MF 01005 ROOM=FOREHEAD

C4812 56PF 5% 25V NPO-C0G-CERM 01005 ROOM=FOREHEAD

I2C_NH_SCL_CONN (CKPLUS_WAIVE=I2C_PULLUP)

R4813 0.00 0% 1/32W MF 01005 ROOM=FOREHEAD

C4813 56PF 5% 25V NPO-C0G-CERM 01005 ROOM=FOREHEAD

I2C_NH_SDA_CONN (CKPLUS_WAIVE=I2C_PULLUP)

PAGE TITLE	spare
DRAWING NUMBER	051-00419
SIZE	D
REVISION	8.0.0
BRANCH	
PAGE	6 OF 53
SHEET	6 OF 81

迅维手机维修培训学校 www.xinxunwei.com 4008009990

D1x I2C Table

Bus	Device	Binary	7-bit Address	8-bit Address	Max Speed
ISP I2C0 1MHz	SALT LAKE (PRIMARY)	0010000X	0x10	0x20	1 MHz
	SALT LAKE (SECONDARY)	0110000X	0x30	0x60	1 MHz
	GRUNBERG (STANDARD)	0011100X	0x1C	0x38	1 MHz
	GRUNBERG (SPECIAL ABSOLUTE R/W)	0011101X	0x1D	0x3A	1 MHz
	GRUNBERG (SPECIAL DELTA READ)	0011110X	0x1E	0x3C	1 MHz
	STROBE 1	1100011X	0x63	0xC6	1 MHz
ISP I2C1 1MHz	LAS VEGAS (PRIMARY)	0100000X	0x20	0x40	1 MHz
	LAS VEGAS (SECONDARY)	0110000X	0x30	0x60	1 MHz
	EDWIN	1100011X	0x63	0xC6	400 kHz
	STROBE 2	0000110X	0x06	0x0C	1 MHz
ISP I2C2 400kHz	CONCORD	0010000X	0x10	0x20	1 MHz
AOP I2C 1MHz	ARC DRIVER 1	100000YX	0x41	0x82	1 MHz
	PROX	1011000X	0x58	0xB0	1 MHz
	SPKAMP1 (L26)	100000YX	0x40	0x80	1 MHz
	TURTLE	0101100X	0x2c	0x58	400 kHz
	MESA	1100001X	0x61	0xC2	400 kHz
Touch I2C 400kHz	MAMBA	1100000X	0x60	0xC0	1 MHz
	MESON	100000OX	0x40	0x80	510 kHz
EEPROM I2C	EEPROM	1010001X	0x51	0xA2	400 kHz
AP I2C0 400kHz	BOOST	1110101X	0x75	0xEA	3.4 MHz
	TRISTAR	0011010X	0x1A	0x34	400 kHz
	BACKLIGHT 1	1100010X	0x62	0xC4	1 MHz
	CHESTNUT	0100111X	0x27	0x4E	400 kHz
AP I2C1 400kHz	ADELYN	1110100X	0x74	0xE8	400 kHz
	TIGRIS	1110101X	0x75	0xEA	400 kHz
	BACKLIGHT 2	1100010X	0x62	0xC4	1 MHz
AP I2C2 400kHz	ALS	0101001X	0x29	0x52	400 kHz
	CONVOY	0100001X	0x21	0x42	3.4 MHz
		0100010X	0x22	0x44	400 kHz
	SPKAMP 2 (L26)	10000ZYX	0x40	0x80	400 MHz
AP I2C3 100kHz	DOCK FLEX (MIC1)	1010100X	0x54	0xA8	1 MHz
	COMBINED BUTTON FLEX (MIC2)	1010100X	0x56	0xAC	1 MHz
	DISP EEPROM	1010001X	0x51	0xA2	400kHz
Homer I2C 1MHz	SCHRODINGER (STANDARD)	0001110X	0xE	0x1C	1 MHz
	SCHRODINGER (CAL REG'S)	0001111X	0xF	0x1D	1 MHz
	EEPROM (STANDARD)	1010000X	0x50	0xA0	
	EEPROM (CONFIG)	1010000X	0x50	0xA0	

迅维手机维修培训学校 4008009990 www.xinxunwei.com

PAGE TITLE: spare

DRAWING NUMBER: 051-00419 SIZE: D

REVISION: 8.0.0

BRANCH:

PAGE: 6 OF 53

SHEET: 6 OF 81

迅维手机维修培训学校 4008009990 www.xinxunwei.com
www.chinafix.com
迅维手机维修培训学校 4008009990 www.xinxunwei.com

PAGE TITLE
spare

DRAWING NUMBER 051-00419	SIZE D
REVISION 8.0.0	
BRANCH	
PAGE 6 OF 53	
SHEET 6 OF 81	

迅维手机维修培训学校 4008009990 www.xinxunwei.com
www.chinafix.com
迅维手机维修培训学校 4008009990 www.xinxunwei.com

PAGE TITLE
spare

DRAWING NUMBER 051-00419	SIZE D
REVISION 8.0.0	
BRANCH	
PAGE 6 OF 53	
SHEET 6 OF 81	

This page contains items which differ accross all MLB designs

PCIe lanes

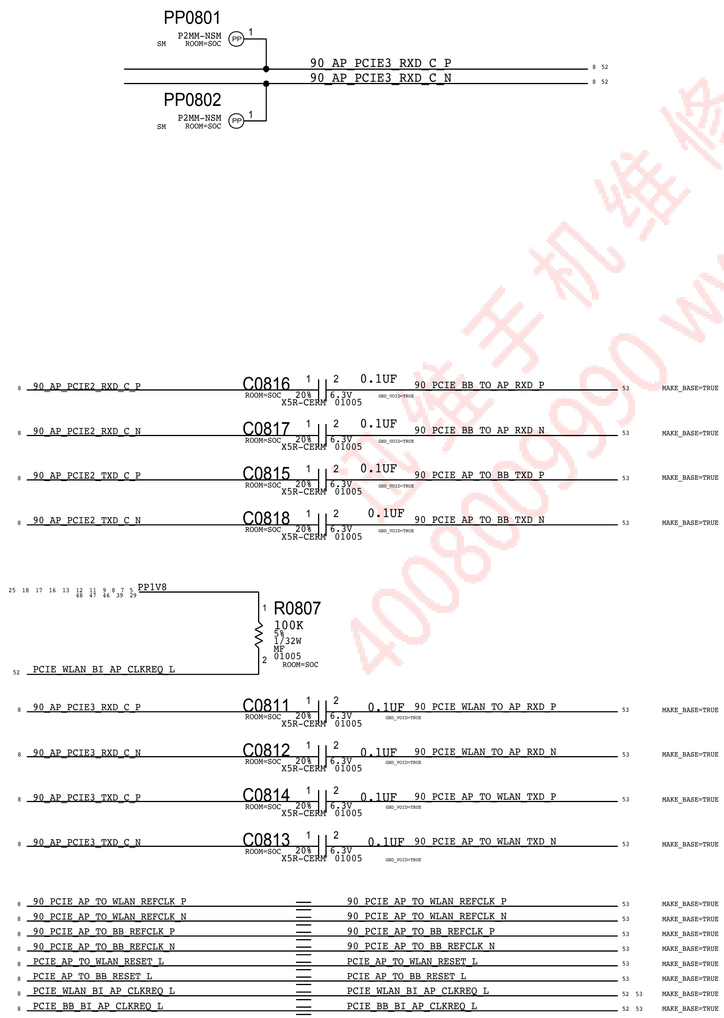

PAGE TITLE	spare
DRAWING NUMBER	051-00419
SIZE	D
REVISION	8.0.0
BRANCH	
PAGE	6 OF 53
SHEET	6 OF 81

迅维手机维修培训学校 4008009990 www.xinxunwei.com
www.chinafix.com

Wifi/BT

WIFI_MLB

PP_VDD_MAIN	PP_VDD_MAIN	
PP1V8_SDRAM	PP1V8_SDRAM	
PMUGPIO_TO_WLAN_CLK32K	PMU_TO_WLAN_32K	
PMU_TO_WLAN_REG_ON	PMU_TO_WLAN_REG_ON	
PMU_TO_BT_REG_ON	PMU_TO_BT_REG_ON	
BT_TO_PMU_HOST_WAKE	BT_TO_PMU_HOST_WAKE	
AP_TO_BT_WAKE	AP_TO_BT_WAKE	
90_PCIE_AP_TO_WLAN_REFCLK_P	100_PCIE_AP_TO_WLAN_REFCLK_P	
90_PCIE_AP_TO_WLAN_REFCLK_N	100_PCIE_AP_TO_WLAN_REFCLK_N	
90_PCIE_AP_TO_WLAN_TXD_P	100_PCIE_AP_TO_WLAN_TX_P	
90_PCIE_AP_TO_WLAN_TXD_N	100_PCIE_AP_TO_WLAN_TX_N	
90_PCIE_WLAN_TO_AP_RXD_P	100_PCIE_WLAN_TO_AP_RX_P	
90_PCIE_WLAN_TO_AP_RXD_N	100_PCIE_WLAN_TO_AP_RX_N	
PCIE_AP_TO_WLAN_RESET_L	PCIE_AP_TO_WLAN_PERST_L	
PCIE_WLAN_BI_AP_CLKREQ_L	PCIE_AP_BI_WLAN_CLKREQ_L	
WLAN_TO_PMU_HOST_WAKE	PCIE_WLAN_TO_PMU_WAKE	
AP_TO_WLAN_DEVICE_WAKE	AP_TO_WLAN_DEV_WAKE	
UART_AP_TO_WLAN_TXD	UART_AP_TO_WLAN_TXD	
UART_WLAN_TO_AP_RXD	UART_WLAN_TO_AP_RXD	
UART_AP_TO_WLAN_RTS_L	UART_AP_TO_WLAN_RTS_L	
UART_WLAN_TO_AP_CTS_L	UART_WLAN_TO_AP_CTS_L	
UART_AP_TO_BT_TXD	UART_AP_TO_BT_TXD	
UART_BT_TO_AP_RXD	UART_BT_TO_AP_RXD	
UART_AP_TO_BT_RTS_L	UART_AP_TO_BT_RTS_L	
UART_BT_TO_AP_CTS_L	UART_BT_TO_AP_CTS_L	
AOP_TO_WLAN_CONTEXT_A	AOP_TO_WLAN_CONTEXT_A	
AOP_TO_WLAN_CONTEXT_B	AOP_TO_WLAN_CONTEXT_B	
I2S_AP_TO_BT_BCLK	I2S_AP_TO_BT_BCLK	
I2S_AP_TO_BT_LRCLK	I2S_AP_TO_BT_LRCK	
I2S_BT_TO_AP_DIN	I2S_BT_TO_AP_DIN	
I2S_AP_TO_BT_DOUT	I2S_AP_TO_BT_DOUT	
	UART_BB_TO_WLAN_COEX	
	UART_WLAN_TO_BB_COEX	
50_UAT_WLAN_5G_WEST	50_UAT_WLAN_5G_WEST	
50_UAT_WLAN_2G_EAST	50_UAT_WLAN_2G_EAST	
50_LAT_WLAN_5G_EAST	50_UAT_WLAN_5G_EAST	
50_LAT_WLAN_G_1	50_WLAN_G_1	
50_LAT_WLAN_A_1	50_WLAN_A_1	
50_UAT2_M	50_UAT2_M	

Cellular

RADIO_MLB

PP_VDD_MAIN	PP_VDD_MAIN	
PP1V8_SDRAM	PP1V8_SDRAM	
PP_VDD_BOOST	PP_VDD_BOOST_RF	
BBPMU_TO_PMU_AMUX1	BBPMU_TO_PMU_AMUX1	
BBPMU_TO_PMU_AMUX2	BBPMU_TO_PMU_AMUX2	
BBPMU_TO_PMU_AMUX3	BBPMU_TO_PMU_AMUX3	
AP_TO_BBPMU_RADIO_ON_L	AP_TO_BBPMU_RADIO_ON_L	
PMU_TO_BBPMU_RESET_L	PMU_TO_BBPMU_RESET_L	
AP_TO_BB_RESET_L	AP_TO_BB_RESET_L	
	BB_TO_AP_RESET_ACT_L	
BB_TO_AP_RESET_DETECT_L	BB_TO_AP_RESET_DETECT_L	
BB_TO_STROBE_DRIVER_GSM_BURST_IND	BB_TO_AP_GSM_TXBURST	
AP_TO_BB_MESA_ON	AP_TO_BB_MESA_ON	
AP_TO_BB_TIME_MARK	AP_TO_BB_TIME_MARK	
AP_TO_BB_COREDUMP	AP_TO_BB_COREDUMP_TRIG	
LCM_TO_MANY_BSYNC	TOUCH_TO_BBPMU_FORCE_PWM	
AP_TO_BB_IPC_GPIO1	AP_TO_BB_IPC_GPIO	
	AP_TO_BB_IPC_GPIO2	
90_PCIE_AP_TO_BB_REFCLK_P	100_PCIE_AP_TO_BB_REFCLK_P	
90_PCIE_AP_TO_BB_REFCLK_N	100_PCIE_AP_TO_BB_REFCLK_N	
90_PCIE_AP_TO_BB_TXD_P	100_PCIE_AP_TO_BB_TX_P	
90_PCIE_AP_TO_BB_TXD_N	100_PCIE_AP_TO_BB_TX_N	
90_PCIE_BB_TO_AP_RXD_P	100_PCIE_BB_TO_AP_RX_P	
90_PCIE_BB_TO_AP_RXD_N	100_PCIE_BB_TO_AP_RX_N	
PCIE_AP_TO_BB_RESET_L	PCIE_AP_TO_BB_PERST_L	
PCIE_BB_BI_AP_CLKREQ_L	PCIE_AP_BI_BB_CLKREQ_L	
BB_TO_PMU_PCIE_HOST_WAKE_L	PCIE_BB_TO_PMU_WAKE_L	
	UART_AP_TO_BB_TXD	
	UART_BB_TO_AP_RXD	
UART_AOP_TO_BB_TXD	UART_AOP_TO_BB_TXD	
UART_BB_TO_AOP_RXD	UART_BB_TO_AOP_RXD	
	UART_AOP_TO_GNSS_TXD	
	UART_GNSS_TO_AOP_RXD	
I2S_BB_TO_AP_BCLK	I2S_AP_TO_BB_BCLK	
I2S_BB_TO_AP_LRCLK	I2S_AP_TO_BB_LRCLK	
I2S_AP_TO_BB_DOUT	I2S_AP_TO_BB_DOUT	
I2S_BB_TO_AP_DIN	I2S_BB_TO_AP_DIN	
UART_BB_TO_WLAN_COEX	UART_BB_TO_WLAN_COEX	
UART_WLAN_TO_BB_COEX	UART_WLAN_TO_BB_COEX	
NFC_SWP	NFC_SWP	
	NFC_TO_BB_CLKREQ	
	BB_TO_NFC_CLK	
NFC_SWP_MUX	NFC_SWP_MUX	
	SE2_READY	
AP_TO_ICEFALL_FW_DWLD_REQ	AP_TO_ICEFALL_FW_DWLD	
	SE2_PWR_REQ	
SE2_PRESENT	SE2_PRESENT	
ICEFALL_LDO_ENABLE	ICEFALL_LDO_ENABLE	
SWD_AP_TO_MANY_SWCLK	SWD_AP_TO_BB_CLK	
SWD_AOP_BI_BB_SWDIO	SWD_AP_BI_BB_IO	
PMU_TO_BB_USB_VBUS_DETECT	USB_BB_VBUS	
90_USB_BB_DATA_P	90_USB_BB_P	
90_USB_BB_DATA_N	90_USB_BB_N	
50_UAT_WLAN_2G_WEST_PLEXER	50_UAT_WLAN_2G_WEST_PLEXER	
50_UAT_LB_MLB_SOUTH	50_UAT_LB_MLB_SOUTH	
50_UAT_MB_HB_SOUTH	50_UAT_MB_HB_SOUTH	
50_UUAT_LB_MLB_NORTH	50_UUAT_LB_MLB_NORTH	
50_UAT1_WEST	50_UAT1_WEST	
BB_TO_UAT_SCLK	UAT_RFFE_CLK	
BB_TO_UAT_DATA	UAT_RFFE_DATA	
50_UAT1_TUNER	50_UAT1_TUNER	
BB_BUFFER_GPO1	BUFFER_GPO1	
BB_BUFFER_GPO2	BUFFER_GPO2	
	LAT_RFFE_CLK	
	LAT_RFFE_DATA	
BB_TO_LAT_GPO1	RFFE_GPO1	
BB_TO_LAT_GPO2	RFFE_GPO2	
BB_TO_LAT_GPO3	RFFE_GPO3	
	PMU_TO_GNSS_EN	
	UART_AP_TO_GNSS_TXD	
	UART_GNSS_TO_AP_RXD	
	UART_AP_TO_GNSS_RTS_L	
	UART_GNSS_TO_AP_CTS_L	
	GNSS_TO_PMU_HOST_WAKE	
	AP_TO_GNSS_TIME_MARK	

Opposite polarity on Karoo -->

I16

I15

RADIO_MLB_FF

50_WLAN_A_1	50_UAT_WLAN_2G_WEST_PLEXER
50_WLAN_G_1	50_UUAT_LB_MLB_NORTH
50_UAT_WLAN_5G_EAST	50_UAT_MB_HB_SOUTH
50_UAT_WLAN_2G_EAST	50_UAT_LB_MLB_SOUTH
50_UAT_WLAN_5G_WEST	50_UAT1_WEST
50_UAT2_M	50_UAT1_TUNER
PP3V0_TRISTAR_ARC_PROX	
VDD_TUNER_RFFE_VIO_1V8	
UAT_TUNER_RFFE_CLK	
UAT_TUNER_RFFE_DATA	
BUFFER_GPO1	
BUFFER_GPO2	
BB_TO_LAT_ANT_SCLK	
BB_TO_LAT_ANT_SDATA	

PP3V0_TRISTAR_ANT_PROX

PP1V8_SDRAM

BB_TO_LAT_ANT_SCLK

BB_TO_LAT_ANT_DATA

To UAT

P2MM-NSM SM ROOM=UAT_DEBUG PP5304 1

P2MM-NSM SM ROOM=UAT_DEBUG PP5301 1

P2MM-NSM SM ROOM=UAT_DEBUG PP5302 1

P2MM-NSM SM ROOM=UAT_DEBUG PP5303 1

FF SPECIFIC

I2

STOCKHOLM_MLB

PP_VDD_MAIN	PP_VDD_MAIN	
PP1V8_SDRAM	PP1V8_SDRAM	
PMU_TO_NFC_EN	PMU_TO_NFC_EN	
BB_TO_NFC_CLK	BB_TO_NFC_CLK	
NFC_TO_BB_CLK_REQ	NFC_TO_BB_CLK_REQ	
AP_TO_NFC_FW_DWLD_REQ	AP_TO_NFC_FW_DWLD	
AP_TO_NFC_DEV_WAKE	AP_TO_NFC_DEV_WAKE	
NFC_TO_PMU_HOST_WAKE	NFC_TO_PMU_HOST_WAKE	
UART_AP_TO_NFC_TXD	UART_AP_TO_NFC_TXD	
UART_NFC_TO_AP_RXD	UART_NFC_TO_AP_RXD	
UART_AP_TO_NFC_RTS_L	UART_AP_TO_NFC_RTS_L	
UART_NFC_TO_AP_CTS_L	UART_NFC_TO_AP_CTS_L	
NFC_SWP	NFC_SWP	
SE2_READY	SE2_READY	
SE2_PWR_REQ	SE2_PWR_REQ	
SE2_PRESENT	SE2_PRESENT	
NFC_SWP_MUX	NFC_SWP_MUX	
	ICEFALL_LDO_ENABLE	

NFC

To LAT

BB_TO_LAT_ANT_SCLK

BB_TO_LAT_ANT_DATA

PAGE TITLE: spare

DRAWING NUMBER	051-00419
SIZE	D
REVISION	8.0.0
BRANCH	
PAGE	6 OF 53
SHEET	6 OF 81

迅维手机维修培训学校 www.xinxunwei.com 4008009990

1. ALL RESISTANCE VALUES ARE IN OHMS, 0.1 WATT +/- 5%.
2. ALL CAPACITANCE VALUES ARE IN MICROFARADS.
3. ALL CRYSTALS & OSCILLATOR VALUES ARE IN HERTZ.

REV	ECN	DESCRIPTION OF REVISION	CK APPD / DATE
8	0006400877	ENGINEERING RELEASED	2016-06-14

D1X WIFI_MLB (PERENNIAL) FEBRUARY 1, 2016

PDF PAGE	CSA PAGE	CONTENTS
2	76	PERENNIAL
3	77	WIFI FRONT-END

BOM OPTIONS:

D10_JP:

PART#	QTY	DESCRIPTION	REFERENCE DESIGNATOR(S)	CRITICAL	BOM OPTION
131S0648	1	CAP,CER,0.3PF,+/-0.05,01005	C7705_RF	CRITICAL	D10_JP
152S00029	1	IND,1.1NH,UH-Q,01005	R7703_RF	CRITICAL	D10_JP
131S0893	1	CAP,CER,0.2PF,+/-0.05,01005	C7706_RF	CRITICAL	D10_JP
117S0161	1	RES,MF,0 OHM,1/32W,01005	R7711_RF	CRITICAL	D10_JP
117S0161	1	RES,MF,0 OHM,1/32W,01005	R7702_RF	CRITICAL	D10_JP
152S1980	1	IND,1.0NH,UH-Q,01005	R7704_RF	CRITICAL	D10_JP
131S0404	1	CAP,3.9PF,+/-1.0PF,01005	R6711_RF	CRITICAL	D10_JP
152S2061	1	IND,7.5NH,UH-Q,01005	C6729_RF	CRITICAL	D10_JP
117S0161	1	RES,MF,0 OHM,1/32W,01005	R7700_RF	CRITICAL	D10_JP
152S2043	1	IND,6.2NH,UH-Q,01005	C7702_RF	CRITICAL	D10_JP
152S1998	1	IND, 0.8NH,UH-Q,01005	L7700_RF	CRITICAL	D10_JP
152S2043	1	IND,6.2NH,UH-Q,01005	L7701_RF	CRITICAL	D10_JP
117S0161	1	RES,MF,0 OHM,1/32W,01005	R7701_RF	CRITICAL	D10_JP

NOSTUFF:C7729_RF,C7711_RF,C7709_RF,C7710_RF, C7707_RF, C7708_RF
C7700_RF, C7703_RF,C7704_RF

D10_ROW:

PART#	QTY	DESCRIPTION	REFERENCE DESIGNATOR(S)	CRITICAL	BOM OPTION
131S0648	1	CAP,CER,0.3PF,+/-0.05,01005	C7705_RF	CRITICAL	D10_ROW
152S00029	1	IND,1.1NH,UH-Q,01005	R7703_RF	CRITICAL	D10_ROW
131S0893	1	CAP,CER,0.2PF,+/-0.05,01005	C7706_RF	CRITICAL	D10_ROW
117S0161	TRUE	RES,MF,0 OHM,1/32W,01005	R7711_RF	CRITICAL	D10_ROW
117S0161	TRUE	RES,MF,0 OHM,1/32W,01005	R7702_RF	CRITICAL	D10_ROW
152S1988	TRUE	IND,2.4NH,UH-Q,01005	R7704_RF	CRITICAL	D10_ROW
117S0161	TRUE	RES,MF,0 OHM,1/32W,01005	R6711_RF	CRITICAL	D10_ROW
152S1853	TRUE	IND,9.1NH,UH-Q,01005	C6729_RF	CRITICAL	D10_ROW
117S0161	TRUE	RES,MF,0 OHM,1/32W,01005	R7700_RF	CRITICAL	D10_ROW
152S2043	1	IND,6.2NH,UH-Q,01005	C7702_RF	CRITICAL	D10_ROW
152S1998	1	IND, 0.8NH,UH-Q,01005	L7700_RF	CRITICAL	D10_ROW
152S2043	TRUE	IND,6.2NH,UH-Q,01005	L7701_RF	CRITICAL	D10_ROW
117S0161	1	RES,MF,0 OHM,1/32W,01005	R7701_RF	CRITICAL	D10_ROW

NOSTUFF:C7729_RF,C7711_RF,C7709_RF,C7710_RF, C7707_RF, C7708_RF
C7700_RF, C7703_RF,C7704_RF

D101_WIFI:

PART#	QTY	DESCRIPTION	REFERENCE DESIGNATOR(S)	CRITICAL	BOM OPTION
131S0648	1	CAP,CER,0.3PF,+/-0.05,01005	C7705_RF	CRITICAL	D101
152S00029	1	IND,1.1NH,UH-Q,01005	R7703_RF	CRITICAL	D101
131S0893	1	CAP,CER,0.2PF,+/-0.05,01005	C7706_RF	CRITICAL	D101
117S0161	1	RES,MF,0 OHM,1/32W,01005	R7711_RF	CRITICAL	D101
117S0161	1	RES,MF,0 OHM,1/32W,01005	R7702_RF	CRITICAL	D101
152S1988	TRUE 1	IND,2.4NH,UH-Q,01005	R7704_RF	CRITICAL	D101
131S0648	TRUE 1	CAP,CER,0.3PF,+/-0.05PF,01005	C7708_RF	CRITICAL	D101
118S0724	TRUE 1	RES,MF, 0 OHM,1/20W, 0201	R6711_RF	CRITICAL	D101
152S2054	TRUE 1	IND,9.1NH,UH-Q,0201	C6729_RF	CRITICAL	D101
117S0161	1	RES,MF,0 OHM,1/32W,01005	R7700_RF	CRITICAL	D101
152S2043	TRUE 1	IND,6.2NH,UH-Q,01005	C7702_RF	CRITICAL	D101
152S1998	1	IND, 0.8NH,UH-Q,01005	L7700_RF	CRITICAL	D101
152S2043	1	IND,6.2NH,UH-Q,01005	L7701_RF	CRITICAL	D101
117S0161	1	RES,MF,0 OHM,1/32W,01005	R7701_RF	CRITICAL	D101

NOSTUFF: C7729_RF,C7711_RF,C7709_RF,C7710_RF, C7707_RF
C7700_RF, C7703_RF,C7704_RF

D11_JP:

PART#	QTY	DESCRIPTION	REFERENCE DESIGNATOR(S)	CRITICAL	BOM OPTION
152S00273	TRUE	IND,0.6NH,UH-Q,01005	R7703_RF	CRITICAL	D11_JP
152S1976	TRUE	IND,0.7NH,UH-Q,01005	R7711_RF	CRITICAL	D11_JP
131S0400	TRUE	CAP,CER,3.5PF+/-0.1,01005	R7702_RF	CRITICAL	D11_JP
152S1986	TRUE	IND,FILM,2.2NH,UH-Q,01005	R7704_RF	CRITICAL	D11_JP
131S0648	TRUE	CAP,CER,0.3PF,+/-0.05PF,01005	C7708_RF	CRITICAL	D11_JP
131S0593	TRUE	CAP,3.9PF,+/-1.0PF,0201,HI-Q	R6711_RF	CRITICAL	D11_JP
152S2055	TRUE	IND,7.5NH,UH-Q,0201	C6729_RF	CRITICAL	D11_JP
117S0161	TRUE	RES,MF,0 OHM,1/32W,01005	R7700_RF	CRITICAL	D11_JP
117S0161	TRUE	RES,MF,0 OHM,1/32W,01005	L7700_RF	CRITICAL	D11_JP
152S1853	TRUE	IND,9.1NH,UH-Q,01005	L7701_RF	CRITICAL	D11_JP
117S0161	TRUE	RES,MF,0 OHM,1/32W,01005	R7701_RF	CRITICAL	D11_JP
131S0893	TRUE	CAP,CER,0.2PF,+/-0.05PF,01005	C7705_RF	CRITICAL	D11_JP
131S0893	1	CAP,CER,0.2PF,+/-0.05PF,01005	C7729_RF	CRITICAL	D11_JP

NOSTUFF:C7706_RF, C7711_RF,C7709_RF,C7710_RF, C7707_RF
C7700_RF,C7702_RF, C7703_RF,C7704_RF

D11_ROW:

PART#	QTY	DESCRIPTION	REFERENCE DESIGNATOR(S)	CRITICAL	BOM OPTION
152S00273	1	IND,0.6NH,UH-Q,01005	R7703_RF	CRITICAL	D11_ROW
152S1976	1	IND,0.7NH,UH-Q,01005	R7711_RF	CRITICAL	D11_ROW
131S0400	1	CAP,CER,3.5PF+/-0.1,01005	R7702_RF	CRITICAL	D11_ROW
152S1986	TRUE 1	IND,FILM,2.2NH,UH-Q,01005	R7704_RF	CRITICAL	D11_ROW
118S0724	TRUE 1	RES,MF,0 OHM,1/20W,0201	R6711_RF	CRITICAL	D11_ROW
152S2054	TRUE 1	IND,9.1NH,UH-Q,0201	C6729_RF	CRITICAL	D11_ROW
117S0161	1	RES,MF,0 OHM,1/32W,01005	R7700_RF	CRITICAL	D11_ROW
117S0161	1	RES,MF,0 OHM,1/32W,01005	L7700_RF	CRITICAL	D11_ROW
152S1853	1	IND,9.1NH,UH-Q,01005	L7701_RF	CRITICAL	D11_ROW
117S0161	1	RES,MF,0 OHM,1/32W,01005	R7701_RF	CRITICAL	D11_ROW
131S0893	1	CAP,CER,0.2PF,+/-0.05PF,01005	C7705_RF	CRITICAL	D11_ROW
131S0893	1	CAP,CER,0.2PF,+/-0.05PF,01005	C7729_RF	CRITICAL	D11_ROW

NOSTUFF:C7706_RF,C7711_RF,C7709_RF,C7710_RF, C7707_RF, C7708_RF
C7700_RF,C7702_RF, C7703_RF,C7704_RF

D111_WIFI:

PART#	QTY	DESCRIPTION	REFERENCE DESIGNATOR(S)	CRITICAL	BOM OPTION
152S00273	1	IND,0.6NH,UH-Q,01005	R7703_RF	CRITICAL	D111
152S1976	1	IND,0.7NH,UH-Q,01005	R7711_RF	CRITICAL	D111
131S0400	1	CAP,CER,3.5PF+/-0.1,01005	R7702_RF	CRITICAL	D111
152S1986	TRUE 1	IND,FILM,2.2NH,UH-Q,01005	R7704_RF	CRITICAL	D111
118S0724	TRUE 1	RES,MF, 0 OHM,1/20W, 0201	R6711_RF	CRITICAL	D111
152S2054	TRUE 1	IND,9.1NH,UH-Q,0201	C6729_RF	CRITICAL	D111
117S0161	1	RES,MF,0 OHM,1/32W,01005	R7700_RF	CRITICAL	D111
117S0161	1	RES,MF,0 OHM,1/32W,01005	L7700_RF	CRITICAL	D111
152S1853	1	IND,9.1NH,UH-Q,01005	L7701_RF	CRITICAL	D111
117S0161	1	RES,MF,0 OHM,1/32W,01005	R7701_RF	CRITICAL	D111
131S0893	1	CAP,CER,0.2PF,+/-0.05PF,01005	C7705_RF	CRITICAL	D111
131S0893	1	CAP,CER,0.2PF,+/-0.05PF,01005	C7729_RF	CRITICAL	D111

NOSTUFF:C7706_RF,C7711_RF,C7709_RF,C7710_RF, C7707_RF, C7708_RF
C7700_RF,C7702_RF, C7703_RF,C7704_RF

POWER

55 53 IN PP_VDD_MAIN
55 53 IN PP1V8_SDRAM

CLOCKS

55 53 IN PMUGPIO_TO_WLAN_CLK32K

CONTROL

55 53 IN PMU_TO_WLAN_REG_ON
55 53 IN PMU_TO_BT_REG_ON
55 5 OUT BT_TO_PMU_HOST_WAKE
55 53 IN AP_TO_BT_WAKE

WLAN PCIE

55 53 IN 90_PCIE_AP_TO_WLAN_REFCLK_P
55 53 IN 90_PCIE_AP_TO_WLAN_REFCLK_N
55 53 IN 90_PCIE_AP_TO_WLAN_TXD_P
55 53 IN 90_PCIE_AP_TO_WLAN_TXD_N
55 5 OUT 90_PCIE_WLAN_TO_AP_RXD_P
55 5 OUT 90_PCIE_WLAN_TO_AP_RXD_N
55 53 IN PCIE_AP_TO_WLAN_RESET_L
2 IO PCIE_WLAN_BI_AP_CLKREQ_L
55 5 OUT WLAN_TO_PMU_HOST_WAKE
55 53 IN AP_TO_WLAN_DEVICE_WAKE

WLAN UART

55 5 OUT UART_WLAN_TO_AP_RXD
55 53 IN UART_AP_TO_WLAN_TXD
55 5 OUT UART_WLAN_TO_AP_CTS_L
55 53 IN UART_AP_TO_WLAN_RTS_L

BLUETOOTH UART

55 53 IN UART_AP_TO_BT_TXD
55 5 OUT UART_BT_TO_AP_RXD
55 53 IN UART_AP_TO_BT_RTS_L
55 5 OUT UART_BT_TO_AP_CTS_L

AOP

55 53 IN AOP_TO_WLAN_CONTEXT_A
55 53 IN AOP_TO_WLAN_CONTEXT_B

AUDIO

55 53 IN I2S_AP_TO_BT_BCLK
55 53 IN I2S_AP_TO_BT_LRCLK
55 5 OUT I2S_BT_TO_AP_DIN
55 53 IN I2S_AP_TO_BT_DOUT

COEX

55 53 IN UART_BB_TO_WLAN_COEX
55 5 OUT UART_WLAN_TO_BB_COEX

ANTENNA

3 IO 50_UAT_WLAN_5G_WEST
2 IO 50_UAT_WLAN_2G_EAST
3 IO 50_LAT_WLAN_5G_EAST
2 IO 50_LAT_WLAN_G_1
2 IO 50_LAT_WLAN_A_1
3 IO 50_UAT2_M

PAGE TITLE	spare
DRAWING NUMBER	051-00419
SIZE	D
REVISION	8.0.0
BRANCH	
PAGE	6 OF 53
SHEET	6 OF 81

CONFIDENTIAL AND PROPRIETARY APPLE SYSTEM DESIGN. FOR REFERENCE PURPOSE ONLY - NOT A CHANGE REQUEST

WIFI/BT

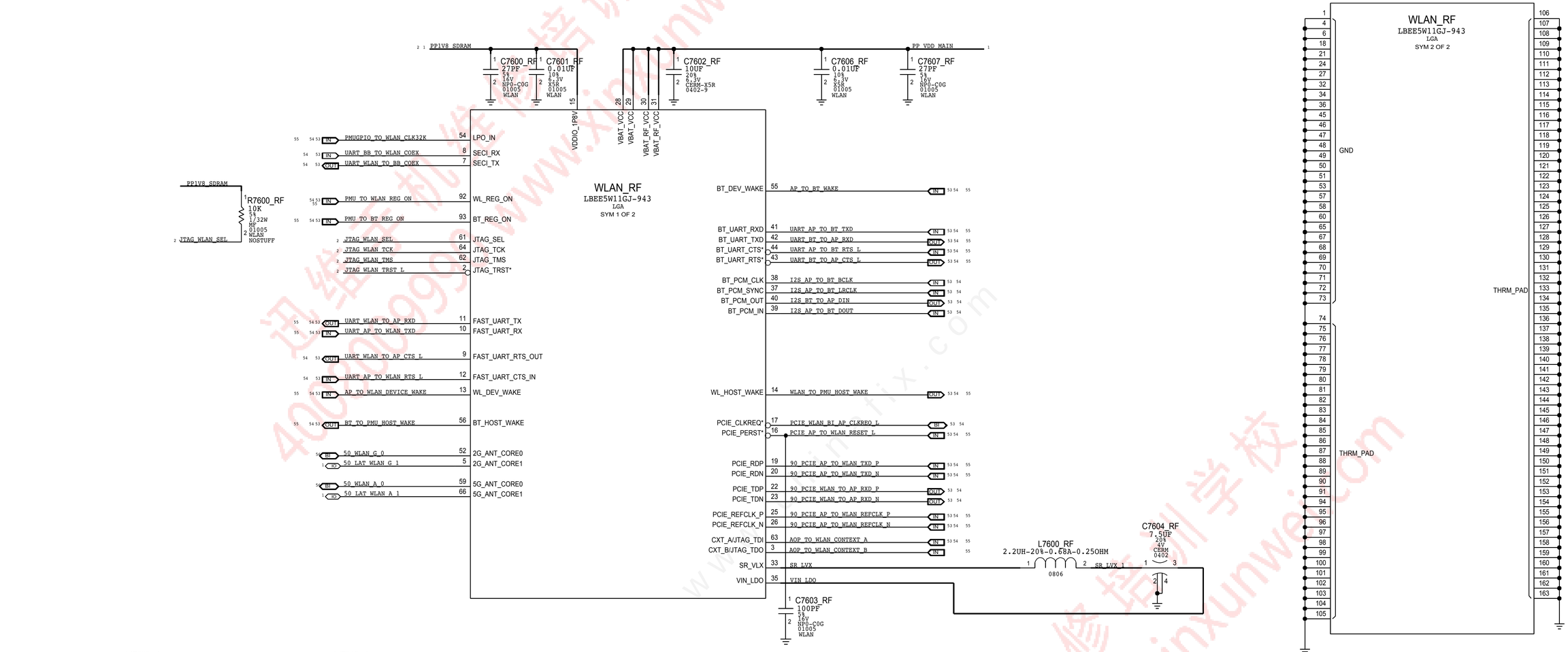

PART NUMBER	ALTERNATE FOR PART NUMBER	BOM OPTION	REF DES	COMMENTS:
339S00201	339S00199	ALTERNATE	WLAN_RF	ALT WIFI/BT MODULE

PP7600_RF P2MM-NSM OMIT SM — AOP_TO_WLAN_CONTEXT_A TDI
PP7601_RF P2MM-NSM OMIT SM — AOP_TO_WLAN_CONTEXT_B TDO
PP7603_RF P2MM-NSM OMIT SM — UART_WLAN_TO_AP_RXD
PP7604_RF P2MM-NSM OMIT SM — UART_AP_TO_WLAN_TXD
PP7605_RF P2MM-NSM OMIT SM — JTAG_WLAN_TCK
PP7606_RF P2MM-NSM OMIT SM — JTAG_WLAN_TMS
PP7607_RF P2MM-NSM OMIT SM — JTAG_WLAN_TRST_L
PP7608_RF P2MM-NSM OMIT SM — AP_TO_WLAN_DEVICE_WAKE
PP7609_RF P2MM-NSM OMIT SM — BT_TO_PMU_HOST_WAKE
PP7610_RF P2MM-NSM OMIT SM — PMUGPIO_TO_WLAN_CLK32K
PP7611_RF P2MM-NSM OMIT SM — WLAN_TO_PMU_HOST_WAKE
PP7612_RF P2MM-NSM OMIT SM — 90_PCIE_AP_TO_WLAN_REFCLK_P
PP7613_RF P2MM-NSM OMIT SM — 90_PCIE_AP_TO_WLAN_REFCLK_N
PP7614_RF P2MM-NSM OMIT SM — 90_PCIE_AP_TO_WLAN_TXD_P
PP7615_RF P2MM-NSM OMIT SM — 90_PCIE_AP_TO_WLAN_TXD_N
PP7616_RF P2MM-NSM OMIT SM — PCIE_AP_TO_WLAN_RESET_L
PP7617_RF P2MM-NSM OMIT SM — JTAG_WLAN_SEL
PP7618_RF P2MM-NSM OMIT SM — PMU_TO_WLAN_REG_ON
PP7619_RF P2MM-NSM OMIT SM — PMU_TO_BT_REG_ON
PP7620_RF P2MM-NSM OMIT SM — UART_AP_TO_BT_TXD
PP7621_RF P2MM-NSM OMIT SM — UART_BT_TO_AP_RXD
PP7622_RF P2MM-NSM OMIT SM — UART_AP_TO_BT_RTS_L
PP7623_RF P2MM-NSM OMIT SM — UART_BT_TO_AP_CTS_L
PP7624_RF P2MM-NSM OMIT SM — AP_TO_BT_WAKE

PAGE TITLE	spare
DRAWING NUMBER	051-00419
SIZE	D
REVISION	8.0.0
BRANCH	
PAGE	6 OF 53
SHEET	6 OF 81

迅维手机维修培训学校 4008009990 www.xinxunwei.com

WIFI UPPER ANTENNA FEEDS

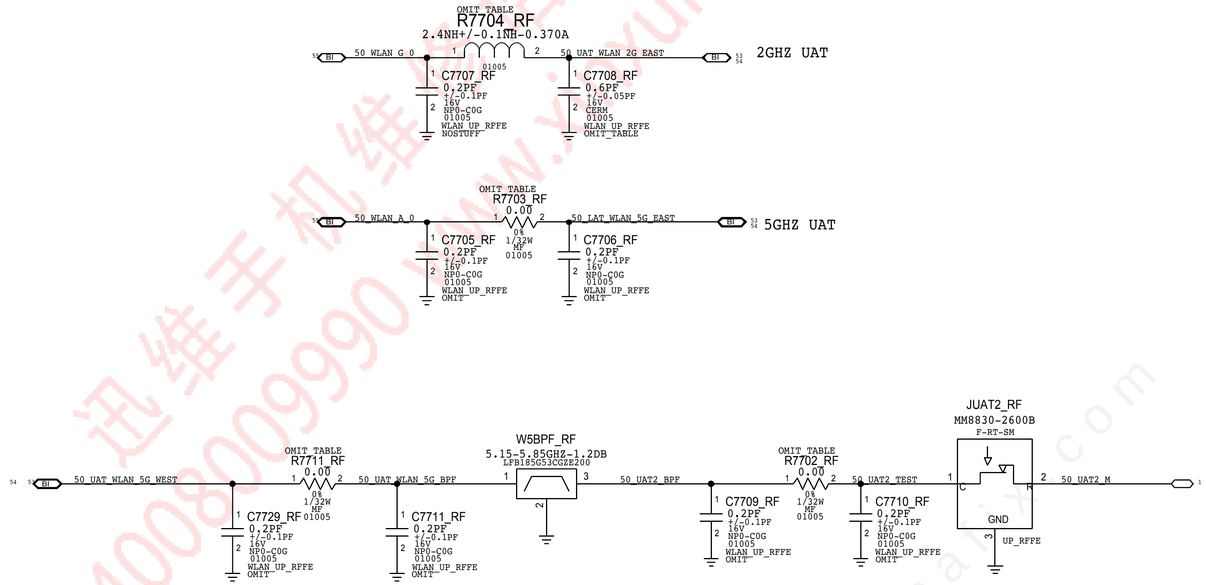

PAGE TITLE	spare
DRAWING NUMBER	051-00419
SIZE	D
REVISION	8.0.0
BRANCH	
PAGE	6 OF 53
SHEET	6 OF 81

迅维手机维修培训学校 4008009990 www.xinxunwei.com
www.chinafix.com

1. ALL RESISTANCE VALUES ARE IN OHMS, 0.1 WATT +/- 5%.
2. ALL CAPACITANCE VALUES ARE IN MICROFARADS.
3. ALL CRYSTALS & OSCILLATOR VALUES ARE IN HERTZ.

REV	ECN	DESCRIPTION OF REVISION	CK APPD
8	0006400877	ENGINEERING RELEASED	

STOCKHOLM MLB
JUNE 9, 2016

58	53		PP_VDD_MAIN
58	53	IN	PP1V8_SDRAM
58	53	IN	PMU_TO_NFC_EN
58	53	OUT	NFC_TO_PMU_HOST_WAKE
58	53	IN	AP_TO_NFC_DEV_WAKE
58	53	IN	AP_TO_NFC_FW_DWLD_REQ
58	53	OUT	NFC_TO_BB_CLK_REQ
58	53	IN	BB_TO_NFC_CLK
58	53	IN	UART_AP_TO_NFC_TXD
58	53	OUT	UART_NFC_TO_AP_RXD
58	53	IN	UART_AP_TO_NFC_RTS_L
58	53	OUT	UART_NFC_TO_AP_CTS_L
	2	BI	NFC_SWP
58	53	IN	SE2_READY
58	53	IN	SE2_PWR_REQ
58	53	IN	SE2_PRESENT
58	53	OUT	NFC_SWP_MUX
58	53	OUT	ICEFALL_LDO_ENABLE

ALTERNATES

PART NUMBER	ALTERNATE FOR PART NUMBER	REFERENCE DESIGNATOR(S)	DESCRIPTION	BOM OPTION
132S0436	132S0400	C7504_RF	0.22UF 20% 6.3V 01005	?

BOM OPTIONS

PART#	QTY	DESCRIPTION	REFERENCE DESIGNATOR(S)	BOM OPTION
131S0883	1	220PF, 0201 2% 50V	C7514_RF	D101
131S00055	1	22PF, 0201 2% 50V	C7512_RF	D101
131S00117	1	120PF, 0201 2% 50V	C7518_RF	D101
131S00026	1	820PF, 0201 2% 50V	C7516_RF	D101
131S0883	1	220PF, 0201 2% 50V	C7514_RF	D10_JP
131S00055	1	22PF, 0201 2% 50V	C7512_RF	D10_JP
131S00019	1	150PF, 0201 2% 50V	C7518_RF	D10_JP
131S0825	1	560PF, 0201 2% 50V	C7516_RF	D10_JP
131S0883	1	220PF, 0201 2% 50V	C7514_RF	D10_ROW
131S00055	1	22PF, 0201 2% 50V	C7512_RF	D10_ROW
131S00117	1	120PF, 0201 2% 50V	C7518_RF	D10_ROW
131S00026	1	820PF, 0201 2% 50V	C7516_RF	D10_ROW

PART#	QTY	DESCRIPTION	REFERENCE DESIGNATOR(S)	BOM OPTION
131S00081	1	270PF, 0201 2% 25V	C7514_RF	D111
131S00118	1	180PF, 0201 2% 50V	C7518_RF	D111
131S00033	1	680PF, 0201 2% 50V	C7516_RF	D111
131S00081	1	270PF, 0201 2% 25V	C7514_RF	D11_JP
131S0731	1	100PF, 0201 2% 50V	C7518_RF	D11_JP
131S00033	1	680PF, 0201 2% 50V	C7516_RF	D11_JP
131S00081	1	270PF, 0201 2% 25V	C7514_RF	D11_ROW
131S00118	1	180PF, 0201 2% 50V	C7518_RF	D11_ROW
131S00033	1	680PF, 0201 2% 50V	C7516_RF	D11_ROW

PAGE TITLE
spare

DRAWING NUMBER 051-00419 SIZE D
REVISION 8.0.0
BRANCH
PAGE 6 OF 53
SHEET 6 OF 81

迅维手机维修培训学校 www.chinafix.com 4008009990 www.xinxunwei.com

STOCKHOLM

NFC CONTROLLER

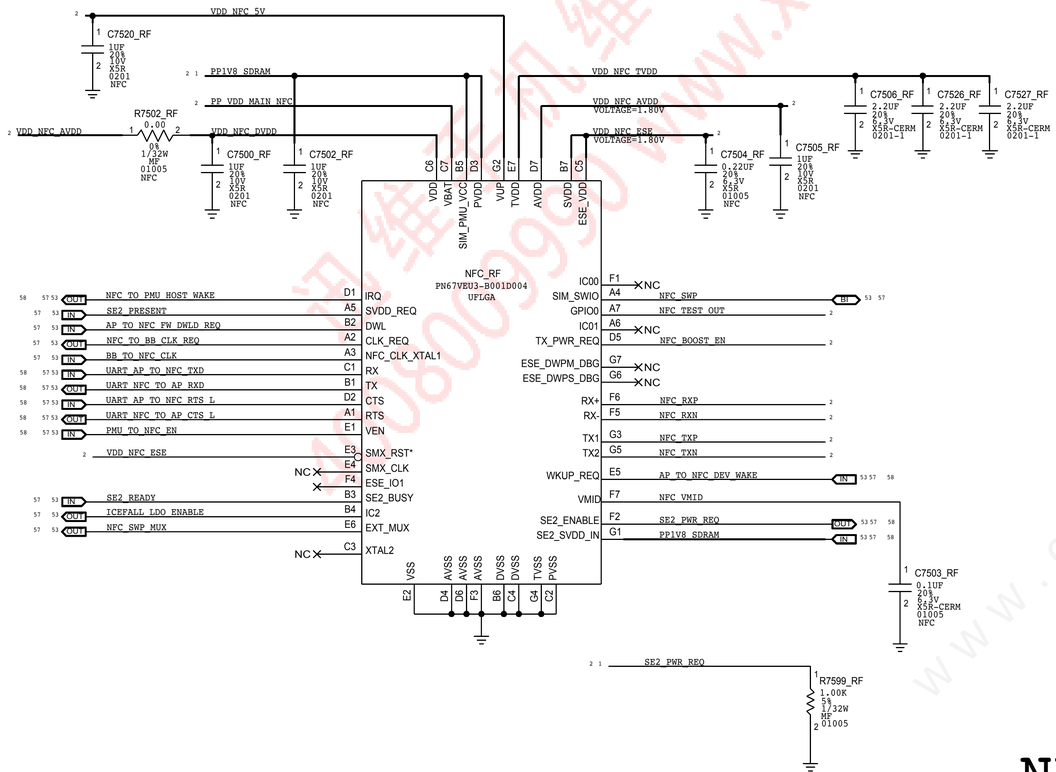

5V BOOSTER

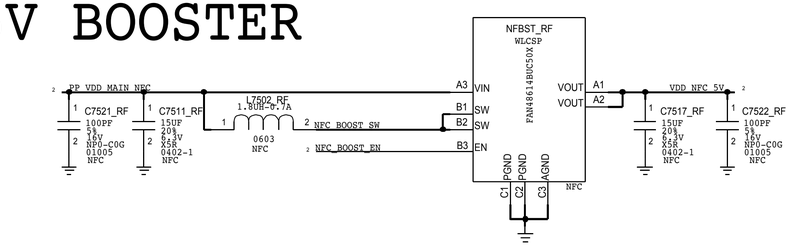

NFC FRONT END

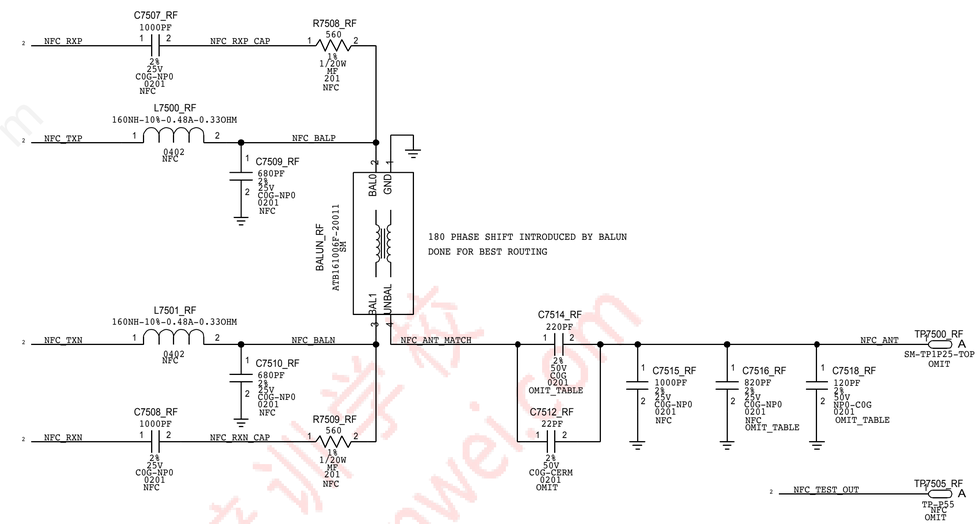

NFC LOAD SWITCH

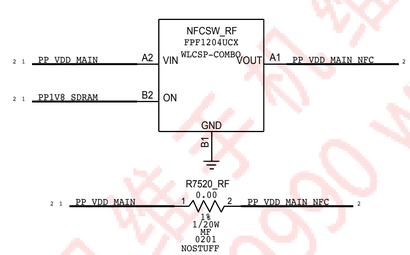

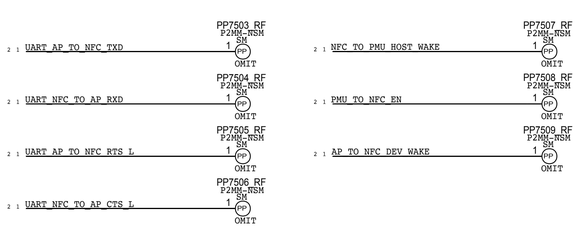

PAGE TITLE	spare
DRAWING NUMBER	051-00419
SIZE	D
REVISION	8.0.0
BRANCH	
PAGE	6 OF 53
SHEET	6 OF 81

www.chinafix.com
迅维网 维修培训学校 www.xinxunwei.com 4008009990

1. ALL RESISTANCE VALUES ARE IN OHMS, 0.1 WATT +/- 5%.
2. ALL CAPACITANCE VALUES ARE IN MICROFARADS.
3. ALL CRYSTALS & OSCILLATOR VALUES ARE IN HERTZ.

REV	ECN	DESCRIPTION OF REVISION	DATE
8	0006400877	ENGINEERING RELEASED	2016-06-14

D10 RADIO MLB FF
FEB 19, 2016

D10 NORTH-SOUTH METROCIRC
339S00086

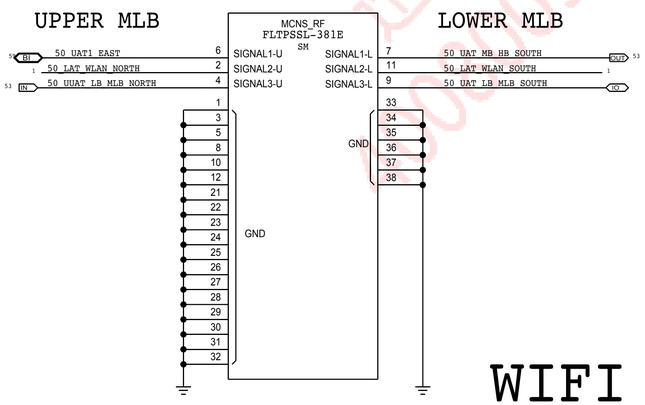

D10 EAST-WEST METROCIRC
339S00110

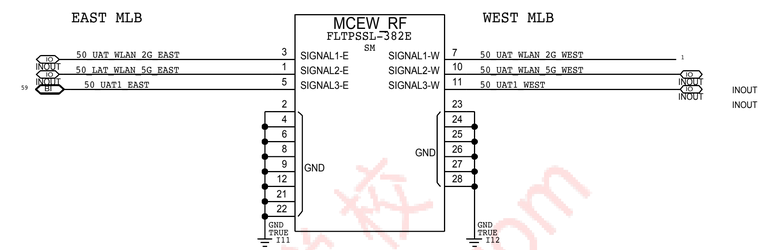

WIFI LOWER ANTENNA FEED

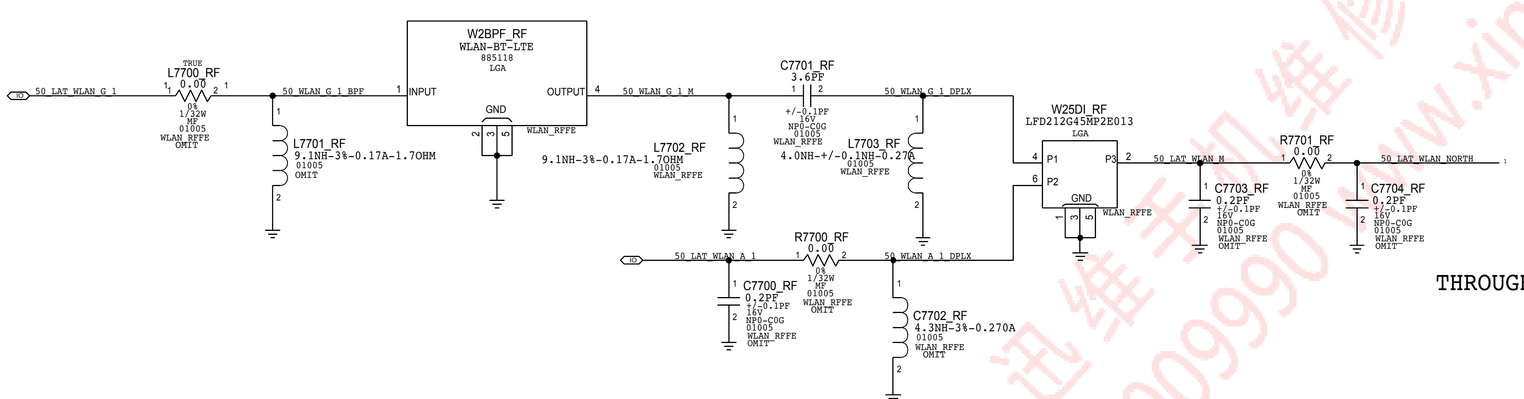

COAX

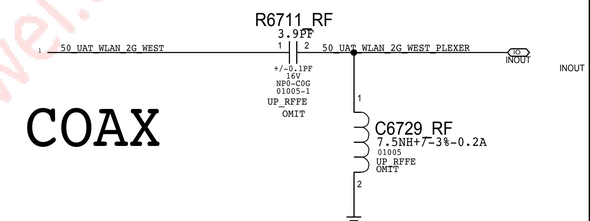

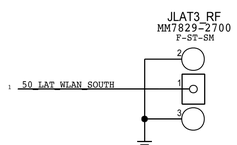

THROUGH METROCIRC

ADD REV ID FOR D10/D11 HERE

PAGE TITLE	spare
DRAWING NUMBER	051-00419
SIZE	D
REVISION	8.0.0
BRANCH	
PAGE	6 OF 53
SHEET	6 OF 81

www.chinafix.com
迅维手机维修培训学校 www.xinxunwei.com 4008009990

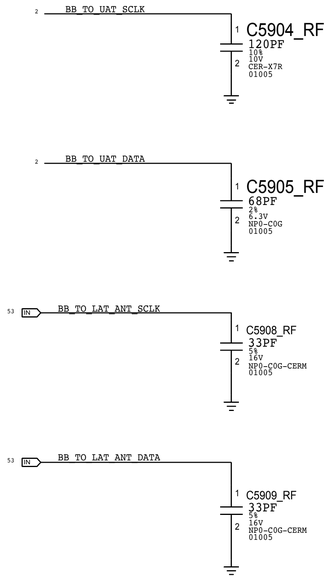

UAT TUNER FLEX

PLEASE CONTACT ANTENNA (MATT MOW)
FOR ANY COMPONENT CHANGE.

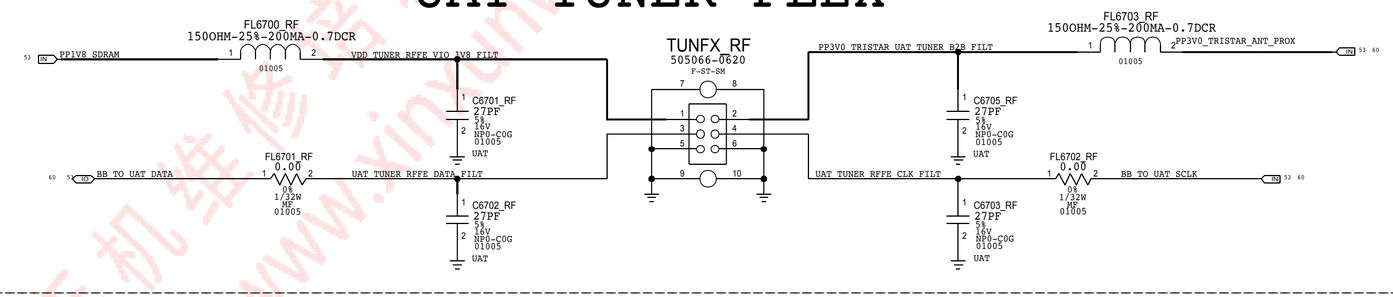

LB/MLB/GNSS/MB/HB STANDOFF

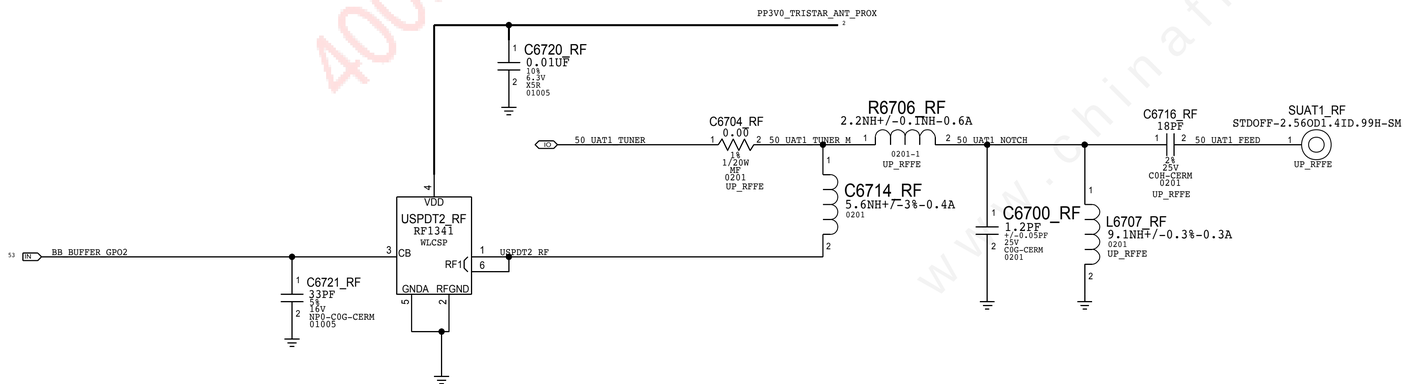

ALT UAT1 GND

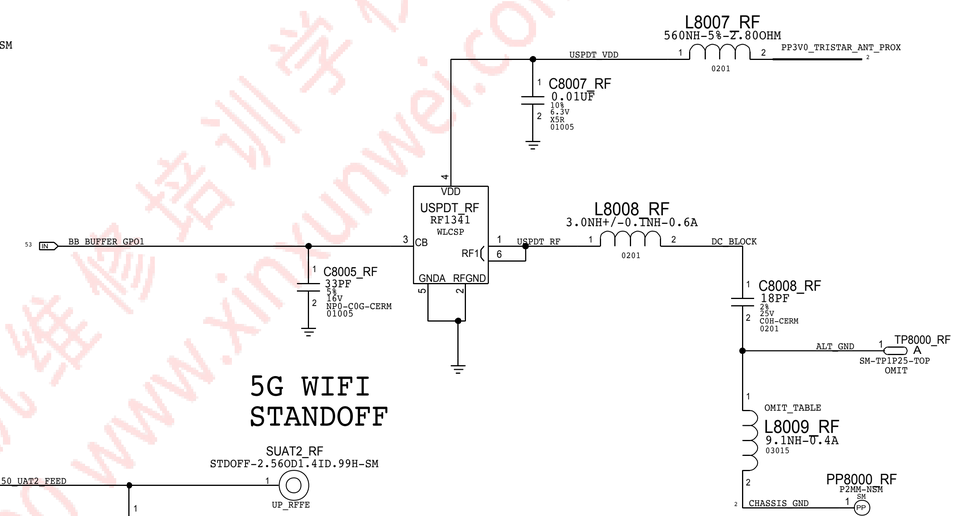

UAT GROUND RING

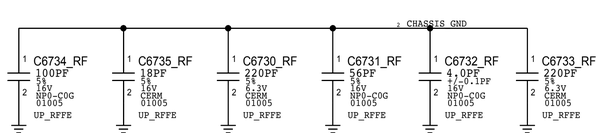

5G WIFI STANDOFF

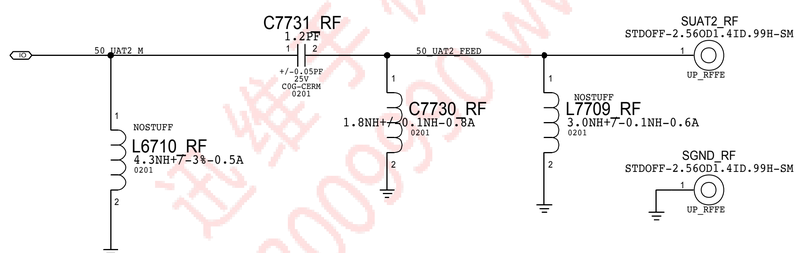

PAGE TITLE	spare
DRAWING NUMBER	051-00419
SIZE	D
REVISION	8.0.0
BRANCH	
PAGE	6 OF 53
SHEET	6 OF 81

迅维手机维修培训学校 4008009990 www.xinxunwei.com
www.chinafix.com

BOM LIST

PART#	QTY	DESCRIPTION	REFERENCE DESIGNATOR(S)	CRITICAL	BOM OPTION
152S1860	1	LONGER PATH INDUCTOR	L8009_RF	CRITICAL	LMBRF
152S0570	1	3.0 NH,0301S	L8009_RF	CRITICAL	NOLMBRF

迅维手机维修培训学校 4008009990 www.xinxunwei.com
www.chinafix.com
迅维手机维修培训学校 4008009990 www.xinxunwei.com

PAGE TITLE: spare

DRAWING NUMBER: 051-00419 SIZE: D

REVISION: 8.0.0

BRANCH:

PAGE: 6 OF 53

SHEET: 6 OF 81

81 ICEFALL, SIM, DEBUG CONN

1. ALL RESISTANCE VALUES ARE IN OHMS, 0.1 WATT +/- 5%.
2. ALL CAPACITANCE VALUES ARE IN MICROFARADS.
3. ALL CRYSTALS & OSCILLATOR VALUES ARE IN HERTZ.

REV	ECN	DESCRIPTION OF REVISION	CK APPD / DATE
8	0006400877	ENGINEERING RELEASED	2016-06-14

MAV16 RADIO_MLB

LAST_MODIFICATION=Wed Jun 8 12:54:09 2016

PAGE	CSA	CONTENTS	SYNC	DATE
62	<CSA_PAGE1>	page1	<SYNC_MASTER1>	<SYNC_DATE1>
63	<CSA_PAGE2>	BOM_OMIT_TABLE	<SYNC_MASTER2>	<SYNC_DATE2>
64	<CSA_PAGE3>	PMU: CONTROL AND CLOCKS	<SYNC_MASTER3>	<SYNC_DATE3>
65	<CSA_PAGE4>	PMU: SWITCHERS AND LDOS	<SYNC_MASTER4>	<SYNC_DATE4>
66	<CSA_PAGE5>	BASEBAND: POWER2	<SYNC_MASTER5>	<SYNC_DATE5>
67	<CSA_PAGE6>	BASEBAND: CONTROL	<SYNC_MASTER6>	<SYNC_DATE6>
68	<CSA_PAGE7>	BASEBAND GPIOS	<SYNC_MASTER7>	<SYNC_DATE7>
69	<CSA_PAGE8>	TRANSCEIVER0/1: POWER	<SYNC_MASTER8>	<SYNC_DATE8>
70	<CSA_PAGE9>	TRANSCEIVER0/1: TX PORTS	<SYNC_MASTER9>	<SYNC_DATE9>
71	<CSA_PAGE10>	TRANSCEIVER0/1: PRX PORTS	<SYNC_MASTER10>	<SYNC_DATE10>
72	<CSA_PAGE11>	RECEIVE MATCHING	<SYNC_MASTER11>	<SYNC_DATE11>
73	<CSA_PAGE12>	LOWER ANTENNA & COUPLERS	<SYNC_MASTER12>	<SYNC_DATE12>
74	<CSA_PAGE13>	DIVERSITY RECEIVE ASM'S	<SYNC_MASTER13>	<SYNC_DATE13>
75	<CSA_PAGE14>	DIVERSITY RECEIVE LNA'S	<SYNC_MASTER14>	<SYNC_DATE14>
76	<CSA_PAGE15>	UPPER ANTENNA FEEDS	<SYNC_MASTER15>	<SYNC_DATE15>
77	<CSA_PAGE16>	PMU: ET MODULATOR	<SYNC_MASTER16>	<SYNC_DATE16>
78	<CSA_PAGE17>	TEST POINTS & BOOT CONFIG	<SYNC_MASTER17>	<SYNC_DATE17>
79	<CSA_PAGE18>	TDD TRANSMIT	<SYNC_MASTER18>	<SYNC_DATE18>
80	<CSA_PAGE19>	FDD TRANSMIT	<SYNC_MASTER19>	<SYNC_DATE19>
	<CSA_PAGE20>		<SYNC_MASTER20>	<SYNC_DATE20>
	<CSA_PAGE21>		<SYNC_MASTER21>	<SYNC_DATE21>
	<CSA_PAGE22>		<SYNC_MASTER22>	<SYNC_DATE22>
	<CSA_PAGE23>		<SYNC_MASTER23>	<SYNC_DATE23>
	<CSA_PAGE24>		<SYNC_MASTER24>	<SYNC_DATE24>
	<CSA_PAGE25>		<SYNC_MASTER25>	<SYNC_DATE25>
	<CSA_PAGE26>		<SYNC_MASTER26>	<SYNC_DATE26>
	<CSA_PAGE27>		<SYNC_MASTER27>	<SYNC_DATE27>
	<CSA_PAGE28>		<SYNC_MASTER28>	<SYNC_DATE28>
	<CSA_PAGE29>		<SYNC_MASTER29>	<SYNC_DATE29>
	<CSA_PAGE30>		<SYNC_MASTER30>	<SYNC_DATE30>

page1

SCH: 951-00964
BOM: 939-00826

ALTERNATES

PART NUMBER	ALTERNATE FOR PART NUMBER	BOM OPTION	REF DES	COMMENTS:
19780565	19780593	ALTERNATE	Y5501_RF	19P2 MHZ XTAL
19780598	19780593	ALTERNATE	Y5501_RF	19P2 MHZ XTAL
138800101	138800095	ALTERNATE	ALL	TRANSITION CAP
335800013	33580894	ALTERNATE	EPROM_RF	IC EEPROM
353800253	353800321	ALTERNATE	SWPMX_RF	IC SWITCH SPDT
155800235	155800234	ALTERNATE	UPPDI_RF	NOLMBRF

ALL:C5616_RF-C5618_RF,C5632_RF-C5634_RF

AP CONNECTIONS

POWER

81 77 65 64 52 EN — PP_VDD_MAIN

EN — PP_VDD_BOOST ═══ PP_VDD_BOOST 4 20

81 68 53 EN — PP1V8_SDRAM — MAKE_BASE=TRUE

AMUX

62 OUT — BBPMU_TO_PMU_AMUX1

62 OUT — BBPMU_TO_PMU_AMUX2

62 OUT — BBPMU_TO_PMU_AMUX3

BB CONTROL

81 78 64 53 EN — AP_TO_BBPMU_RADIO_ON_L

78 64 53 EN — PMU_TO_BBPMU_RESET_L

81 64 53 EN — AP_TO_BB_RESET_L

78 68 54 OUT — BB_TO_AP_RESET_DETECT_L

78 68 54 OUT — BB_TO_STROBE_DRIVER_GSM_BURST_IND

68 53 EN — AP_TO_BB_MESA_ON

78 68 53 EN — AP_TO_BB_TIME_MARK

78 68 53 EN — AP_TO_BB_COREDUMP

64 53 EN — LCM_TO_MANY_BSYNC

68 53 EN — AP_TO_BB_IPC_GPIO1

PCIE

78 67 53 IN — 90_PCIE_AP_TO_BB_REFCLK_P

78 67 53 IN — 90_PCIE_AP_TO_BB_REFCLK_N

67 53 IN — 90_PCIE_AP_TO_BB_TXD_P

67 53 IN — 90_PCIE_AP_TO_BB_TXD_N

67 54 OUT — 90_PCIE_BB_TO_AP_RXD_P

67 54 — 90_PCIE_BB_TO_AP_RXD_N

68 64 53 IN — PCIE_AP_TO_BB_RESET_L

7 IO — PCIE_BB_BI_AP_CLKREQ_L

78 68 54 OUT — BB_TO_PMU_PCIE_HOST_WAKE_L

AOP

68 53 IN — UART_AOP_TO_BB_TXD

78 68 54 OUT — UART_BB_TO_AOP_RXD

AUDIO

68 53 IN — I2S_BB_TO_AP_BCLK

68 53 IN — I2S_BB_TO_AP_LRCLK

68 53 IN — I2S_AP_TO_BB_DOUT

68 54 OUT — I2S_BB_TO_AP_DIN

WLAN

81 78 68 53 IN — UART_BB_TO_WLAN_COEX

81 78 68 54 OUT — UART_WLAN_TO_BB_COEX

NFC

81 53 IN — NFC_SWP

81 78 53 IN — NFC_SWP_MUX

81 78 53 OUT — SE2_READY

81 78 53 IN — AP_TO_ICEFALL_FW_DWLD_REQ

81 78 53 IN — SE2_PWR_REQ

78 64 53 IN — NFC_TO_BB_CLK_REQ

78 64 54 OUT — BB_TO_NFC_CLK

81 53 OUT — SE2_PRESENT

81 78 53 IN — ICEFALL_LDO_ENABLE

DEBUG

81 67 53 IN — SWD_AP_TO_MANY_SWCLK

20 6 IO — SWD_AOP_BI_BB_SWDIO

81 78 64 53 IN — PMU_TO_BB_USB_VBUS_DETECT

20 17 6 IO — 90_USB_BB_DATA_P

20 17 6 IO — 90_USB_BB_DATA_N

ANTENNA

15 IO — 50_UAT_WLAN_2G_WEST_PLEXER

14 IO — 50_UAT1_WEST

12 IO — 50_UAT_LB_MLB_SOUTH

12 IO — 50_UAT_MB_HB_SOUTH

14 IO — 50_UUAT_LB_MLB_NORTH

TUNER

OUT — BB_TO_UAT_SCLK ═══ BB_TO_UAT_SCLK 7 14 — MAKE_BASE=TRUE

IO — BB_TO_UAT_DATA ═══ BB_TO_UAT_DATA 7 14 — MAKE_BASE=TRUE

15 IO — 50_UAT1_TUNER

68 54 OUT — BB_BUFFER_GPO1

68 54 OUT — BB_BUFFER_GPO2

DOCK

OUT — BB_TO_LAT_ANT_SCLK ═══ BB_TO_LAT_ANT_SCLK 7 17 — MAKE_BASE=TRUE

IO — BB_TO_LAT_ANT_DATA ═══ BB_TO_LAT_ANT_DATA 7 17 — MAKE_BASE=TRUE

68 54 OUT — BB_TO_LAT_GPO1

68 54 OUT — BB_TO_LAT_GPO2

68 54 OUT — BB_TO_LAT_GPO3

page1

PAGE TITLE	spare
DRAWING NUMBER	051-00419
SIZE	D
REVISION	8.0.0
BRANCH	
PAGE	6 OF 53
SHEET	6 OF 81

迅维手机维修培训学校 www.xinxunwei.com 4008009990 www.chinafix.com

BOM OPTIONS:

LMBRF:

PART#	QTY	DESCRIPTION	REFERENCE DESIGNATOR(S)	CRITICAL	BOM OPTION
353S00723	1	MLB PAD	MLBPA_RF	CRITICAL	LMBRF
117S0002	1	MLB PAD LAT OUTPUT MATCH	R7105_RF	CRITICAL	LMBRF
152S2042	1	MLB PAD UAT OUTPUT MATCH	R7106_RF	CRITICAL	LMBRF
353S00627	1	MLB LNA	MLBLN_RF	CRITICAL	LMBRF
117S0002	1	MLB LNA OUTPUT MATCH	R6710_RF	CRITICAL	LMBRF
155S00139	1	PENTAPLEXER	PPLXR_RF	CRITICAL	LMBRF
118S0643	1	RES,MF,4.99K OHM,01005	R7506_RF	CRITICAL	LMBRF
155S00193	1	FLTR,DIPLEXER,LB-MB-HB,DPX,SHIELD,0805	UATDI_RF	CRITICAL	LMBRF
155S00158	1	FLTR,DIPLEXER,LB-MB/HB,MIRROR,0805	UPPDI_RF	CRITICAL	LMBRF
337S00284	1	IC,SECURE ELEMENT,BCM20211,WLBGA25	SE2_RF	CRITICAL	LMBRF
138S0739	1	CAP,1UF,0201	C7201_RF	CRITICAL	LMBRF
138S0739	1	CAP,1UF,0201	C7528_RF	CRITICAL	LMBRF
132S0316	1	CAP,0.1UF,01005	C7501_RF	CRITICAL	LMBRF
138S0739	1	CAP,1UF,0201	C7523_RF	CRITICAL	LMBRF
138S0739	1	CAP,1UF,0201	C7524_RF	CRITICAL	LMBRF
138S00032	1	CAP,2.2UF,0201	C7529_RF	CRITICAL	LMBRF
138S00032	1	CAP,2.2UF,0201	C7530_RF	CRITICAL	LMBRF
131S0217	1	CAP,100PF,01005	C7531_RF	CRITICAL	LMBRF
118S0627	1	RES,10KOHM,01005	R7512_RF	CRITICAL	LMBRF
353S00026	1	LDO,BGA,2X2	SE2LDO_RF	CRITICAL	LMBRF
131S0630	1	CAP,CER,NPO/COG,27PF,2%,16V,01005	C6345_RF	CRITICAL	LMBRF
131S0341	1	CAP,CER,COG,3.0PF,+/-0.05,25V,0201,HI-Q	C6348_RF	CRITICAL	LMBRF
152S2006	1	IND,FILM,6.2NH,3%,400MA,UH-Q,0201	L6322_RF	CRITICAL	LMBRF
131S0630	1	CAP,CER,NPO/COG,27PF,2%,16V,01005	C6315_RF	CRITICAL	LMBRF
152S2006	1	IND,FILM,6.2NH,3%,400MA,UH-Q,0201	L6305_RF	CRITICAL	LMBRF
131S0341	1	CAP,CER,COG,3.0PF,+/-0.05PF,25V,0201,HI-Q	C6306_RF	CRITICAL	LMBRF
131S0630	1	CAP,CER,NPO/COG,27PF,2%,16V,01005	C6106_RF	CRITICAL	LMBRF
152S2051	1	IND,1.3NH,1.1A,0201	R6404_RF	CRITICAL	LMBRF
152S2000	1	IND,2.0NH,600MA,0201	R7104_RF	CRITICAL	LMBRF
131S00001	1	CAP,CER,0.1PF,25V,0201	C7119_RF	CRITICAL	LMBRF
118S0724	1	RES,MF,0OHM,1/20W,0201	R6703_RF	CRITICAL	LMBRF
118S0724	1	RES,MF,0OHM,1/20W,0201	R6708_RF	CRITICAL	LMBRF
131S0363	1	CAP,CER,COG,HQ,0.6PF,+/-0.05PF,25V,0201	C7123_RF	CRITICAL	LMBRF
152S2002	1	IND,2.7NH,+/-0.1NH,600MA,0201,UH-Q	R6605_RF	CRITICAL	LMBRF
131S0337	1	CAP,1.5PF,+/-0.05PF,25V,0201,HQ	C6610_RF	CRITICAL	LMBRF
118S0724	1	RES,MF,0OHM,1/20W,0201	R6606_RF	CRITICAL	LMBRF
131S0275	1	CAP,CER,COG,0.3PF,+/-0.1PF,25V,0201,HQ	C6416_RF	CRITICAL	LMBRF
118S0608	1	RES,MF,1K OHM,1%,1/32W,01005	R5911_RF	CRITICAL	LMBRF
152S1356	1	IND,10NH,3%,250MA,HI-Q,0201	C6613_RF	CRITICAL	LMBRF

NOLMBRF:

PART#	QTY	DESCRIPTION	REFERENCE DESIGNATOR(S)	CRITICAL	BOM OPTION
131S0444	1	DCS/PCS RX FILTER MATCH	R6301_RF	CRITICAL	NOLMBRF
152S2020	1	DCS/PCS RX FILTER MATCH	L6320_RF	CRITICAL	NOLMBRF
155S00149	1	DCS/PCS RX FILTER	GSMRX_RF	CRITICAL	NOLMBRF
152S2005	1	DCS/PCS RX MATCH (DCS)	L6318_RF	CRITICAL	NOLMBRF
131S0319	1	DCS/PCS RX MATCH (DCS)	C6332_RF	CRITICAL	NOLMBRF
131S0630	1	DCS/PCS RX MATCH (DCS)	C6340_RF	CRITICAL	NOLMBRF
152S2005	1	DCS/PCS RX MATCH (DCS)	L6319_RF	CRITICAL	NOLMBRF
131S0385	1	DCS/PCS RX MATCH (DCS)	C6333_RF	CRITICAL	NOLMBRF
131S0630	1	DCS/PCS RX MATCH (DCS)	C6341_RF	CRITICAL	NOLMBRF
155S00163	1	QUADPLEXER	PPLXR_RF	CRITICAL	NOLMBRF
155S00199	1	FLTR,DPX,PASS THRU,LB-MB-HB,SHLD,0805	UATDI_RF	CRITICAL	NOLMBRF
155S00234	1	FLTR,DPX,PASS THRU,LB-MB-HB,UNSHLD,0805	UPPDI_RF	CRITICAL	NOLMBRF
118S0724	1	RES,MF,0OHM,1/20W,0201	R6404_RF	CRITICAL	NOLMBRF
152S2044	1	IND,2.2NH,+/-0.1NH,600MA,0201	R7104_RF	CRITICAL	NOLMBRF
152S00157	1	1.2NH,+/-0.05NH,1.1A,UH-Q,0201	R6703_RF	CRITICAL	NOLMBRF
131S0549	1	18PF,0201,25V	R6708_RF	CRITICAL	NOLMBRF
131S0445	1	CAP,CER,12PF,5%,25V,0201,HI-Q	R6606_RF	CRITICAL	NOLMBRF

D10 SPECIFIC:

PART#	QTY	DESCRIPTION	REFERENCE DESIGNATOR(S)	CRITICAL	BOM OPTION
131S0278	1	CAP,CER,COG,1PF,+/-0.1PF,25V,0201,HI-Q	C7120_RF	CRITICAL	D10

D11 SPECIFIC:

PART#	QTY	DESCRIPTION	REFERENCE DESIGNATOR(S)	CRITICAL	BOM OPTION
131S0425	1	CAP,CER,COG,0.5PF,+/-0.05PF,25V,0201,HI-Q	C7120_RF	CRITICAL	D11

www.chinafix.com
迅维手机维修培训学校 4008009990 www.xinxunwei.com

PAGE TITLE	spare
DRAWING NUMBER	051-00419
SIZE	D
REVISION	8.0.0
BRANCH	
PAGE	6 OF 53
SHEET	6 OF 81

PMU: CONTROL AND CLOCKS

HW_REV_ID	R5505	R5501	REVISION
0.10V	887K	51.1K	DEV1
0.20V	422K	51.1K	DEV2
0.30V	255K	51.1K	DEV 2.1
0.40V	180K	51.1K	DEV 3
0.50V	124K	51.1K	T181
0.60V	102K	51.1K	PP/P1
0.70V	82.5K	51.1K	DEV4
0.80V	63.4K	51.1K	P2
0.90V	51.1K	51.1K	DEV5
1.00V	51.1K	63.4K	EVT
1.10V	51.1K	82.5K	EVT DOE
1.20V	50.0K	100K	EVT ALT/CARBON
1.30V	39.0K	100K	DEV6
1.40V	14.7K	51.1K	CARRIER
1.50V	40.2K	200K	DVT
1.60V	6.34K	51.1K	PVT

RESET AND CONTROL: PMU

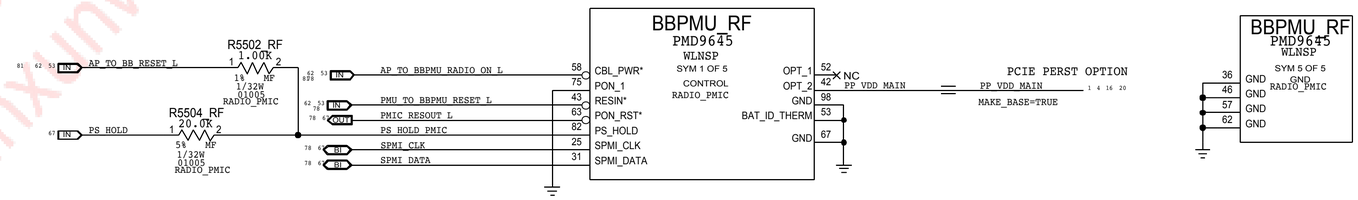

MPPS AND GPIOS: PMU

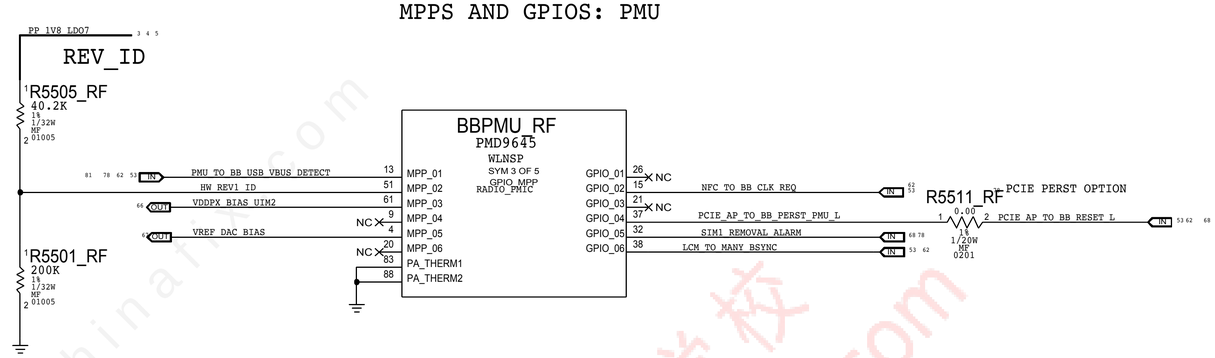

XTAL AND CLOCK: PMU

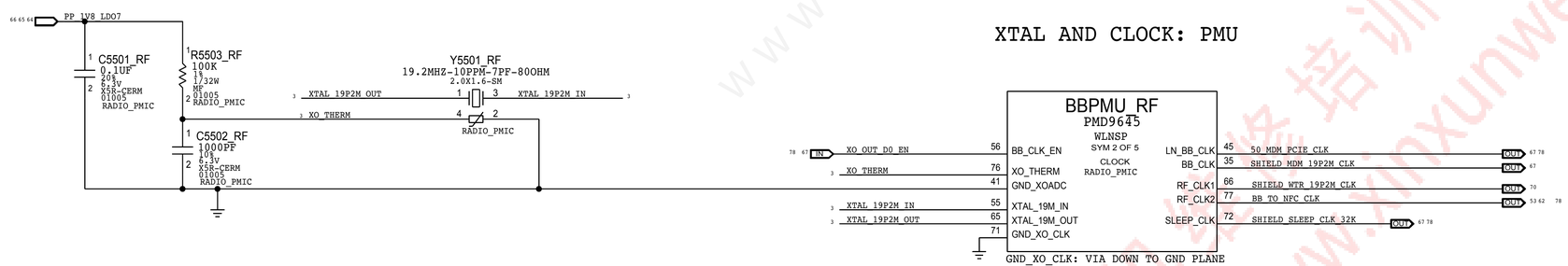

PAGE TITLE	spare
DRAWING NUMBER	051-00419
SIZE	D
REVISION	8.0.0
BRANCH	
PAGE	6 OF 53
SHEET	6 OF 81

迅维手机维修培训学校 www.xinxunwei.com 4008009990 www.chinafix.com

PMU: SWITCHERS AND LDOS

SWITCHERS BULK CAPS

MAKE_BASE=TRUE
PP_VDD_MAIN
C5620_RF 15UF 20% 6.3V CERM 0402 RADIO_PMIC
C5621_RF 15UF 20% 6.3V CERM 0402 RADIO_PMIC
GND
C5622_RF 15UF 20% 6.3V CERM 0402 RADIO_PMIC
C5623_RF 15UF 20% 6.3V CERM 0402 RADIO_PMIC
C5624_RF 15UF 20% 6.3V CERM 0402 RADIO_PMIC
C5625_RF 15UF 20% 6.3V CERM 0402 RADIO_PMIC

DESENSE CAPS

C5635_RF 100PF 5% 16V NPO-COG 01005
C5636_RF 27PF 2% 16V CERM 01005
PLACE C5635 AND C5636 NEAR THE PMU

BBPMU_RF

PMD9645
WLNSP
SYM 4 OF 5
POWER
RADIO_PMIC

Pin	Signal	Net
5	VDD_S1	PP_VDD_MAIN
16	VDD_S1	
6	GND_S1	GND
17	GND_S1	
28	GND_S1	
33	GND_S1	
92	VDD_S2	PP_VDD_MAIN
103	VDD_S2	
102	GND_S2	GND
70	VDD_S3	PP_VDD_MAIN
49	GND_S3	GND
54	GND_S3	
8	VDD_S4	PP_VDD_MAIN
1	GND_S4	GND
7	GND_S4	
94	VDD_S5	PP_VDD_MAIN
93	GND_S5	GND
86	VDD_L1_2_16	PP_1V225_SMPS2
44	VDD_L3_4	BBPMU_TO_PMU_AMUX2
14	VDD_L5_6_15	BBPMU_TO_PMU_AMUX3
23	VDD_L7_8	
89	VDD_L9	
90	VIN_VPH1	PP_VDD_BOOST
47	VIN_VPH2	PP_VDD_MAIN
73	VDD_OTP	VDD_OTP
78	VREF_DDR	MDM_VREF_LPDDR2
74	AVDD_BYP	AVDD_BYP
79	REF_BYP	REF_BYP
68	GND_REF	
24	VDD_XO_RF	
10	VREG_S1	
11	VSW_S1	
22	VSW_S1	
27	VSW_S1	
91	VREG_S2	
97	VSW_S2	
69	VREG_S3	
59	VSW_S3	
64	VSW_S3	
12	VREG_S4	
2	VSW_S4	
87	VREG_S5	
99	VSW_S5	
80	VREG_L1	
81	VREG_L2	
39	VREG_L3	
48	VREG_L4_16	
19	VREG_L5	
3	VREG_L6	
18	VREG_L7	
29	VREG_L8	
100	VREG_L9	
84	VREG_L10	
95	VREG_L11	
85	VREG_L12	
96	VREG_L13	
101	VREG_L14	
30	VREG_L15	
34	VREG_XO	VREG_XO
40	GND_XO	VREG_XO_GND
60	VREG_RF	VREG_RF_CLK
50	GND_RF_CLK	VREG_RF_CLK_GND

C5629_RF 0.47UF 10% 6.3V CERM-X5R 0201 AVDD_BYP_GND
C5601_RF 0.1UF 10% 6.3V CERM-X5R 01005 RADIO_PMIC
R5601_RF 0.00 0% 1/32W MF 01005
XW5616_RF SHORT-10L-0.TRM-SM
XW5617_RF SHORT-10L-0.TRM-SM

PLACE XW CLOSE TO PMU
VIA XW DOWN TO THE GND PLANE

C5602_RF 1UF 20% 10V X5R 0201 RADIO_PMIC
C5603_RF 1UF 20% 10V X5R 0201 RADIO_PMIC
XW5614_RF SHORT-10L-0.TRM-SM
XW5615_RF SHORT-10L-0.TRM-SM
XO_GND
RF_CLK_GND

PLACE XW CLOSE TO PMU
VIA XW DOWN TO THE GND PLANE

L5601_RF 1UH-20%-0.054OHM-3.4A 2520 RADIO_PMIC
L5602_RF 2.2UH-20%-0.14OHM-1.6A 0806 RADIO_PMIC
L5603_RF 1.0UH-20%-2.7A-0.056OHM 0806 RADIO_PMIC
L5604_RF 2.2UH-20%-0.14OHM-1.6A 0806 RADIO_PMIC
L5605_RF 1.0UH-20%-2.7A-0.056OHM 0806 RADIO_PMIC

Net	Rail	Output
PP_VSW_S1	MDM MODEM, XO SHUTDOWN: OFF	BBPMU_TO_PMU_AMUX1 0.90V/2685MA
PP_VSW_S2	LOW VOLTAGE LDOS, XO SHUTDOWN: ON	PP_1V225_SMPS2 1.25V/693MA
PP_VSW_S3	MDM MEMORY, MDM USB, XO SHUTDOWN: ON	BBPMU_TO_PMU_AMUX2 1.16V/1951MA
PP_VSW_S4	HIGH VOLTAGE LDOS, XO SHUTDOWN: ON	BBPMU_TO_PMU_AMUX3 1.85V/1241MA
PP_VSW_S5	CORE, XO SHUTDOWN: ON	PP_1V0_SMPS5 1.01V/1059MA
MDM LOW VOLTAGE ANALOG	XO SHUTDOWN: OFF	PP_1V5_LDO1 1.23V/124MA
MDM EBI1, DDR CORE	XO SHUTDOWN: BYP	PP_1V2_LDO2 1.20V/569MA
MDM CORE	XO SHUTDOWN: OFF	PP_0V9_LDO3 1.00V/610MA
MDM PCIE	XO SHUTDOWN: BYP	PP_0V95_LDO4 1.00V/88MA
MDM HIGH VOLTAGE ANALOG	XO SHUTDOWN: ON	PP_1V7_LDO5 1.80V/52MA
MDM 1.8V I/O, DDR, SHARED 1.8V VOLTAGE RAIL	XO SHUTDOWN: BYP	PP_1V8_LDO6 1.80V/366MA
MDM PLL	XO SHUTDOWN: OFF	PP_1V8_LDO7 1.80V/15MA
MDM LOW VOLTAGE USB	XO SHUTDOWN: OFF	PP_1V8_LDO8 1.80V/133MA
MEMORY	XO SHUTDOWN: ON	PP_1V0_LDO9 1.11V/1253MA
MDM HIGH VOLTAGE USB	XO SHUTDOWN: OFF	PP_3V075_LDO10 3.20V/15MA
UIM1	XO SHUTDOWN: ON	VDD_SIM1 1.80V/60MA
FRONT END SUPPLY	XO SHUTDOWN: OFF	PP_2V7_LDO12 2.70V/62MA
UIM2	XO SHUTDOWN: OFF	VDD_SIM2 1.80V/60MA
GPS LNA	XO SHUTDOWN: OFF	PP_1V8_LDO14 2.70V/5MA
RFFE VIO	XO SHUTDOWN: BYP	PP_1V8_LDO15 1.80V/245MA

C5614_RF 43UF 20% 10V X5R 0603 GND
C5615_RF 20UF 20% 6.3V CERM-X5R 0402 GND
C5631_RF 20UF 20% 6.3V CERM-X5R 0402
C5616_RF 25UF 20% 6.3V X5R 0402 GND
C5632_RF 25UF 20% 6.3V X5R 0402
C5617_RF 25UF 20% 6.3V X5R 0402 GND
C5633_RF 25UF 20% 6.3V X5R 0402
C5618_RF 25UF 20% 6.3V X5R 0402 GND
C5634_RF 25UF 20% 6.3V X5R 0402

C5626_RF 1UF 20% 10V X5R 0201 RADIO_PMIC
C5604_RF 10UF 20% 6.3V CERM-X5R 0402 RADIO_PMIC
C5605_RF 1UF 20% 10V X5R 0201 RADIO_PMIC
C5627_RF 10UF 20% 6.3V CERM-X5R 0402 RADIO_PMIC
C5609_RF 1UF 20% 10V X5R 0201 RADIO_PMIC
C5608_RF 4.7UF 20% 6.3V X5R-CERM1 402 RADIO_PMIC
C5607_RF 1UF 20% 10V X5R 0201 RADIO_PMIC
C5630_RF 20UF 20% 6.3V CERM-X5R 0402
C5610_RF 1UF 20% 10V X5R 0201 RADIO_PMIC
C5611_RF 1UF 20% 10V X5R 0201 RADIO_PMIC
C5628_RF 1UF 20% 10V X5R 0201 RADIO_PMIC
C5613_RF 1UF 20% 10V X5R 0201 RADIO_PMIC
C5612_RF 1UF 20% 10V X5R 0201 RADIO_PMIC

BBPMU_TO_PMU_AMUX1 MAKE_BASE=TRUE → BBPMU_TO_PMU_AMUX1
BBPMU_TO_PMU_AMUX2 MAKE_BASE=TRUE → BBPMU_TO_PMU_AMUX2
BBPMU_TO_PMU_AMUX3 MAKE_BASE=TRUE → BBPMU_TO_PMU_AMUX3

PAGE TITLE	spare
DRAWING NUMBER	051-00419
SIZE	D
REVISION	8.0.0
BRANCH	
PAGE	6 OF 53
SHEET	6 OF 81

CONFIDENTIAL AND PROPRIETARY APPLE SYSTEM DESIGN. FOR REFERENCE PURPOSE ONLY - NOT A CHANGE REQUEST

迅维手机维修培训学校 4008009990 www.xinxunwei.com

BASEBANDS: POWER

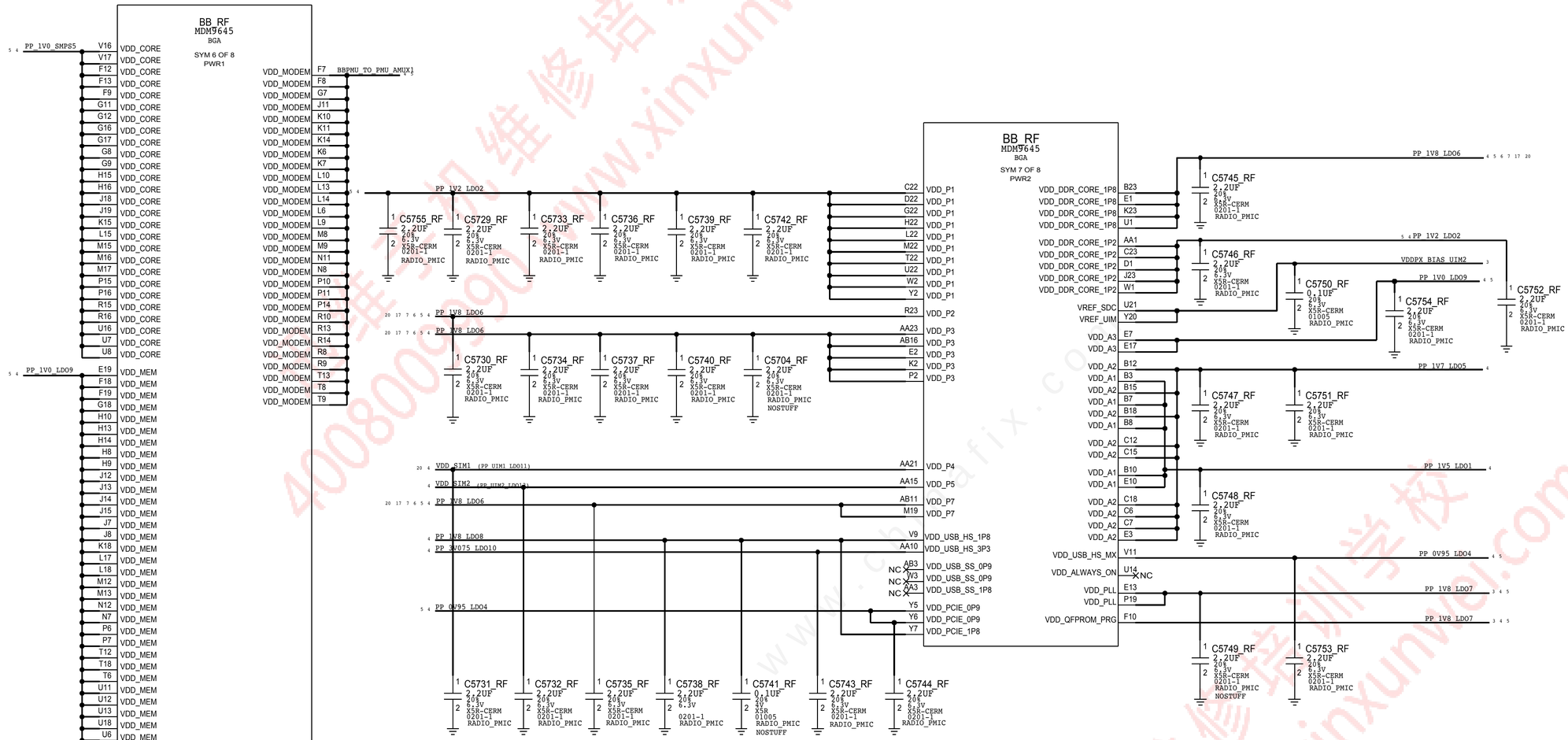

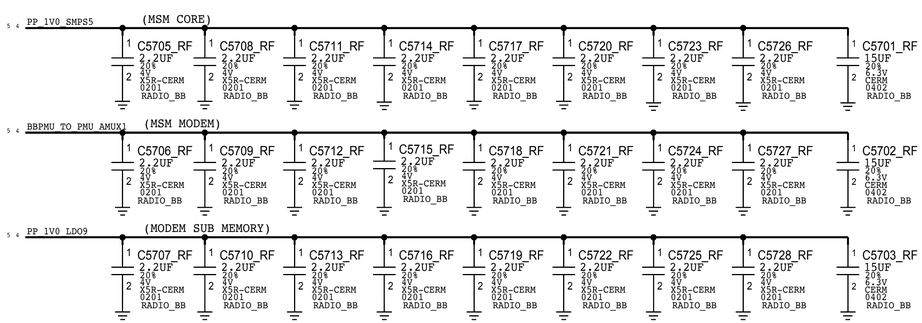

CONFIDENTIAL AND PROPRIETARY APPLE SYSTEM DESIGN. FOR REFERENCE PURPOSE ONLY - NOT A CHANGE REQUEST

PAGE TITLE	spare
DRAWING NUMBER	051-00419
SIZE	D
REVISION	8.0.0
BRANCH	
PAGE	6 OF 53
SHEET	6 OF 81

迅维手机维修培训学校 4008009990 www.xinxunwei.com

BASEBAND: CONTROL AND INTERFACES

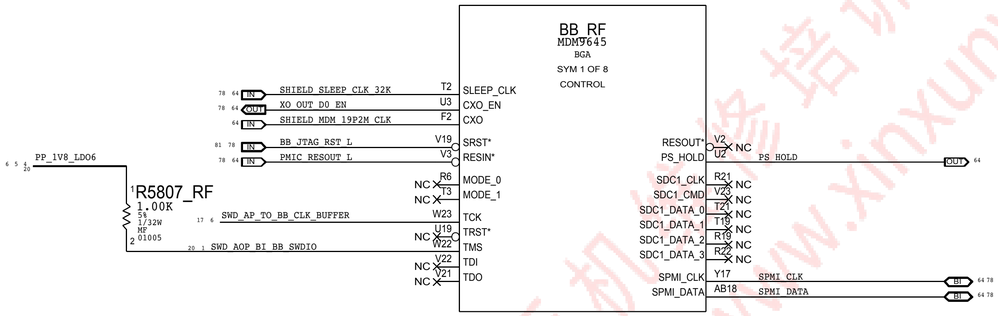

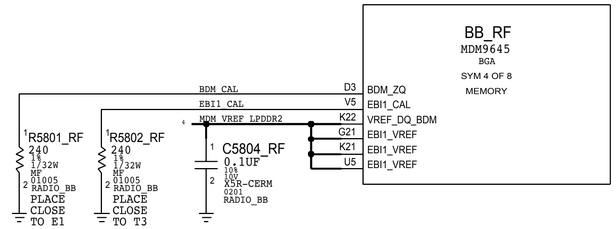

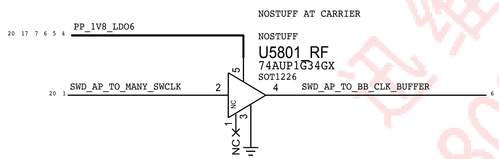

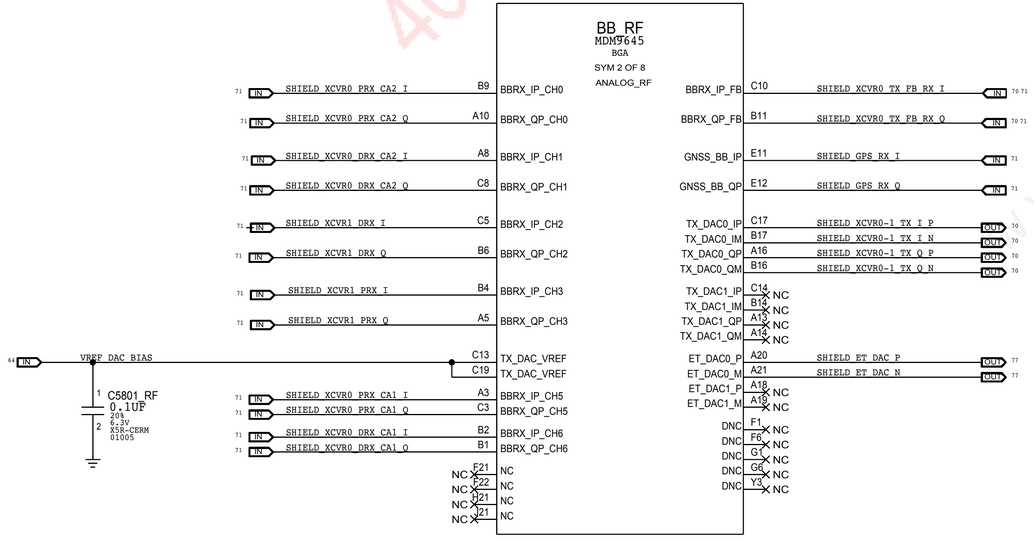

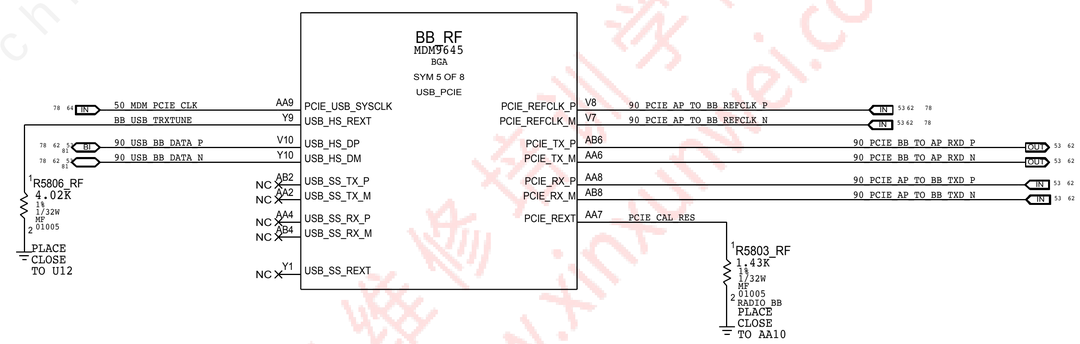

PAGE TITLE	spare
DRAWING NUMBER	051-00419
SIZE	D
REVISION	8.0.0
BRANCH	
PAGE	6 OF 53
SHEET	6 OF 81

CONFIDENTIAL AND PROPRIETARY APPLE SYSTEM DESIGN. FOR REFERENCE PURPOSE ONLY - NOT A CHANGE REQUEST

迅维手机维修培训学校 4008009990 www.xinxunwei.com
www.chinafix.com

BASEBAND: GPIOS

SKU	R5911_RF	R5912_RF
ROW	NOSTUFF	NOSTUFF
JP	1.0 KOHM	NOSTUFF

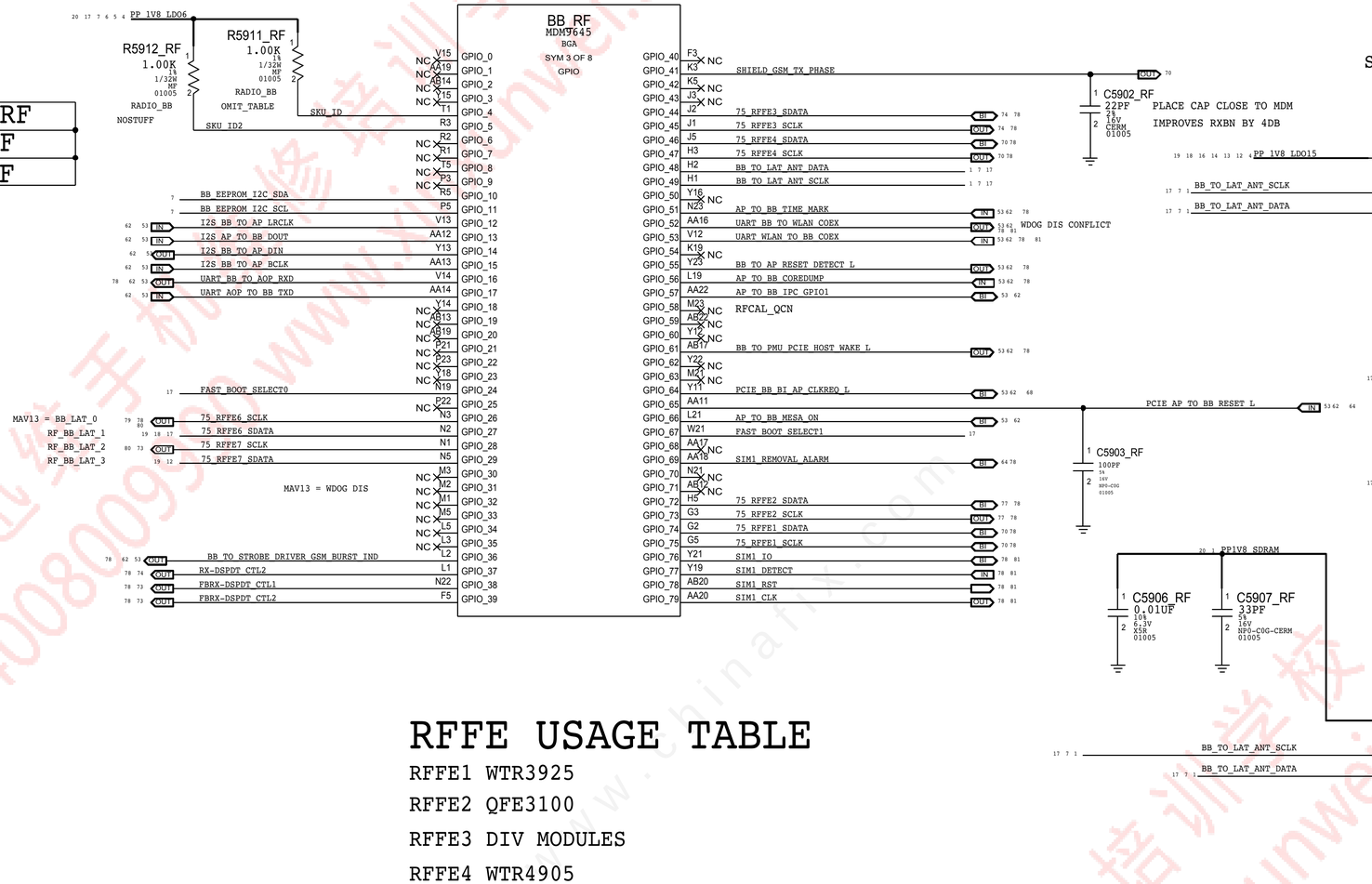

BUFFER ON RFFE5
SCLK/SDATA_A IS OUTPUT

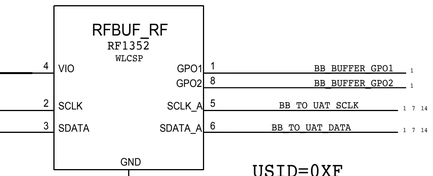

USID=0XF

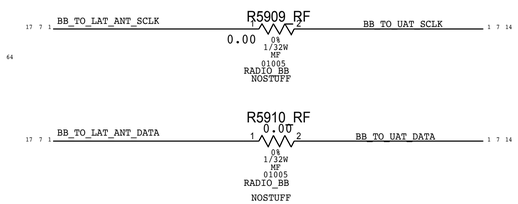

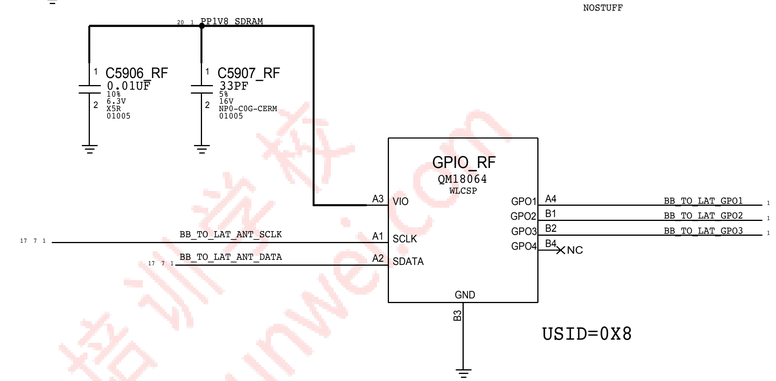

USID=0X8

RFFE USAGE TABLE

RFFE1 WTR3925
RFFE2 QFE3100
RFFE3 DIV MODULES
RFFE4 WTR4905
RFFE5 TUNERS + ELNAS
RFFE6 2G PA,MLB PA,MB/HB TDD PA,MB/HB FDD PA
RFFE7 LB PA, COUPLERS

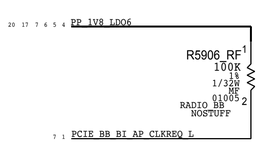

PCIE PULL-UPS TO BB RAIL

BB EEPROM

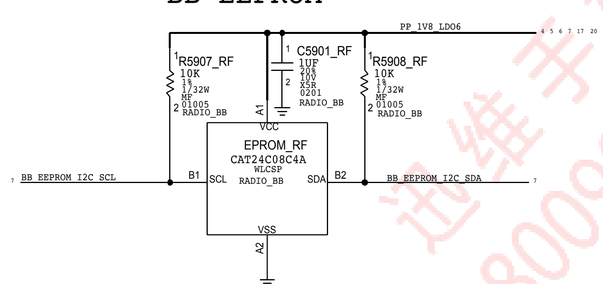

CONFIDENTIAL AND PROPRIETARY APPLE SYSTEM DESIGN. FOR REFERENCE PURPOSE ONLY - NOT A CHANGE REQUEST

PAGE TITLE: spare
DRAWING NUMBER: 051-00419
SIZE: D
REVISION: 8.0.0
BRANCH:
PAGE: 6 OF 53
SHEET: 6 OF 81

TRANSCEIVER: POWER

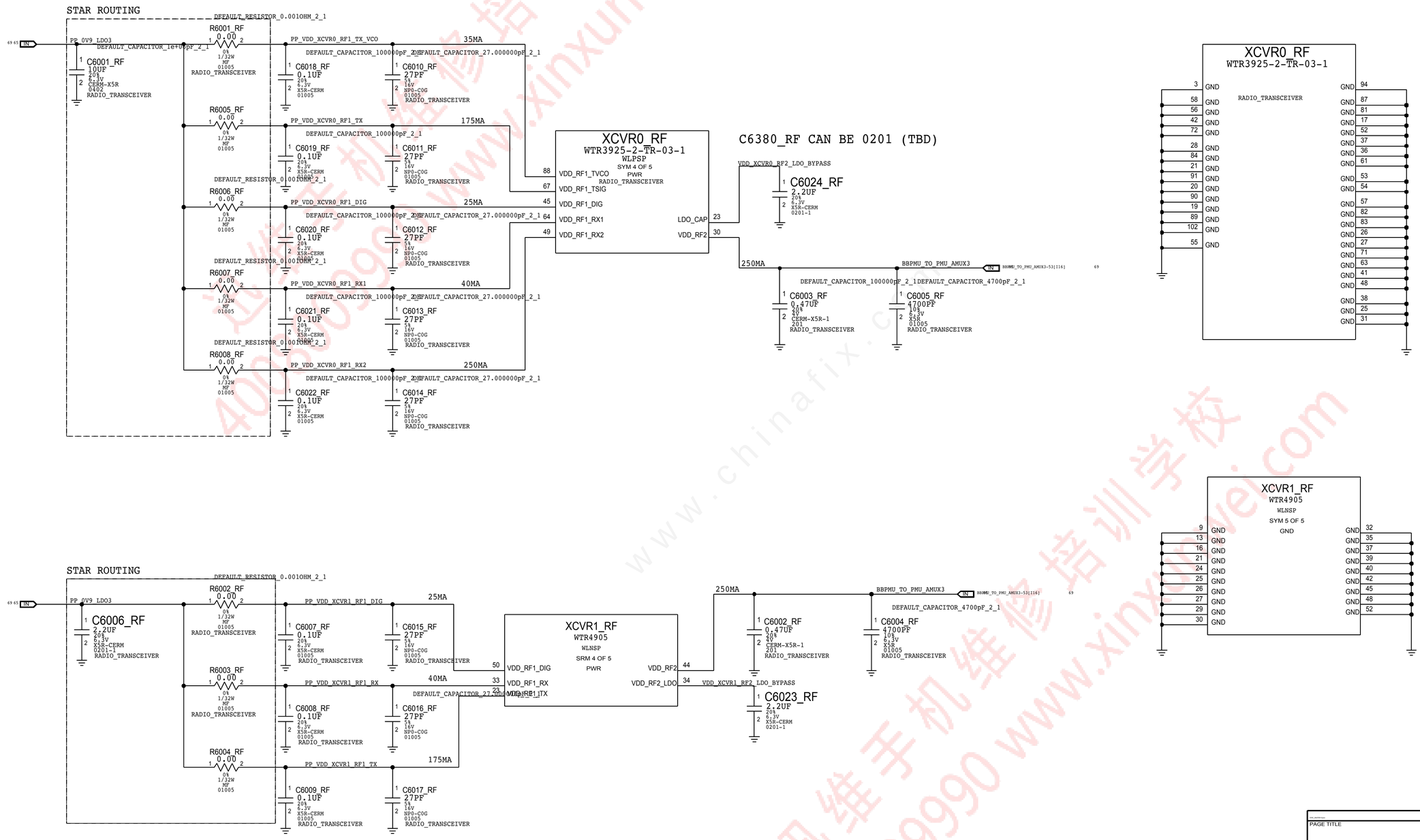

CONFIDENTIAL AND PROPRIETARY APPLE SYSTEM DESIGN. FOR REFERENCE PURPOSE ONLY - NOT A CHANGE REQUEST

PAGE TITLE	spare
DRAWING NUMBER	051-00419
SIZE	D
REVISION	8.0.0
BRANCH	
PAGE	6 OF 53
SHEET	6 OF 81

迅维手机维修培训学校 www.xinxunwei.com 4008009990 www.chinafix.com

TRANSCEIVER: TX PORTS

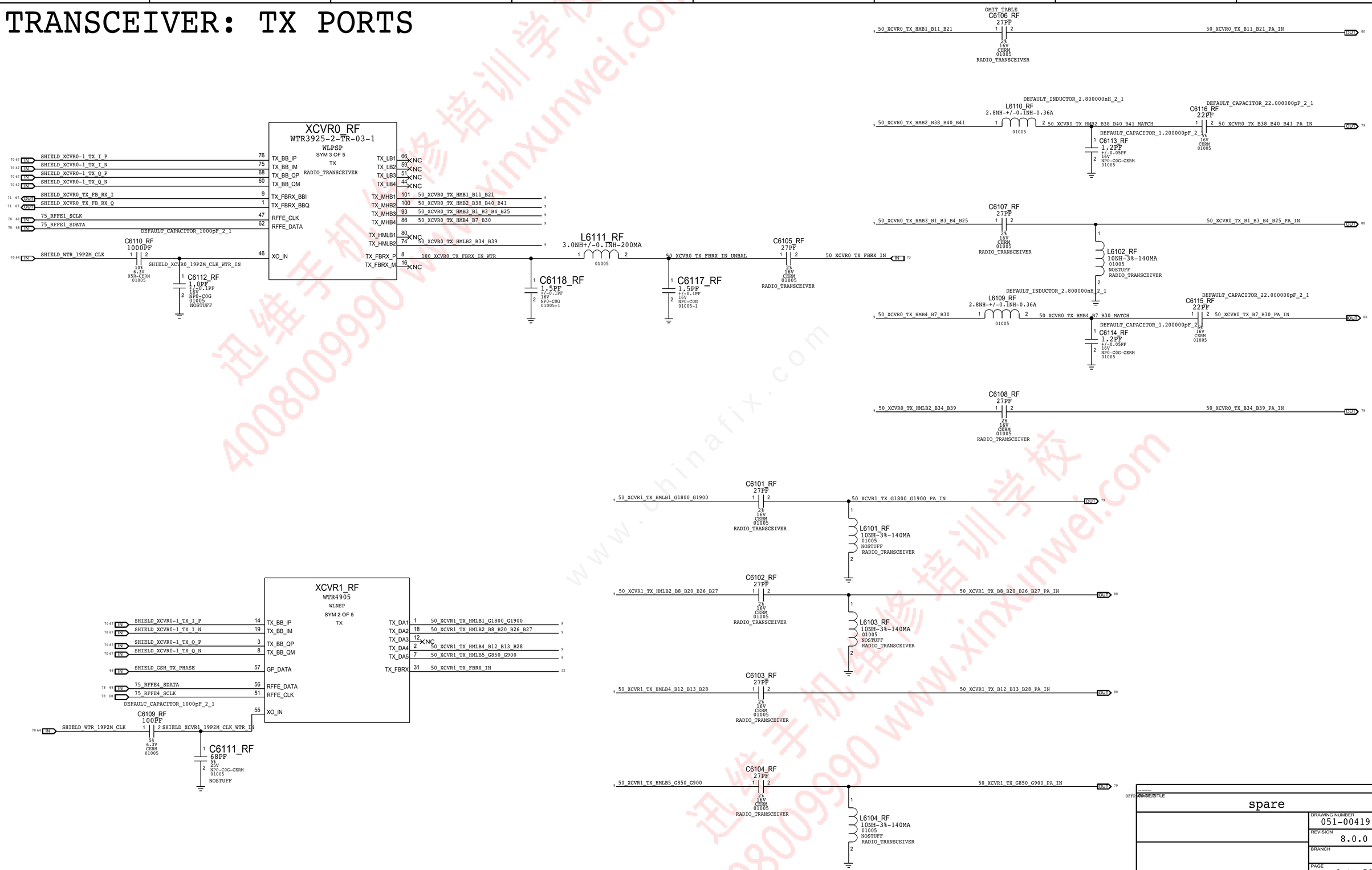

CONFIDENTIAL AND PROPRIETARY APPLE SYSTEM DESIGN. FOR REFERENCE PURPOSE ONLY - NOT A CHANGE REQUEST

PAGE TITLE	spare
DRAWING NUMBER	051-00419
SIZE	D
REVISION	8.0.0
BRANCH	
PAGE	6 OF 53
SHEET	6 OF 81

迅维手机维修培训学校 4008009990 www.xinxunwei.com
www.chinafix.com

TRANSCEIVER: PRX, DRX, & GPS PORTS

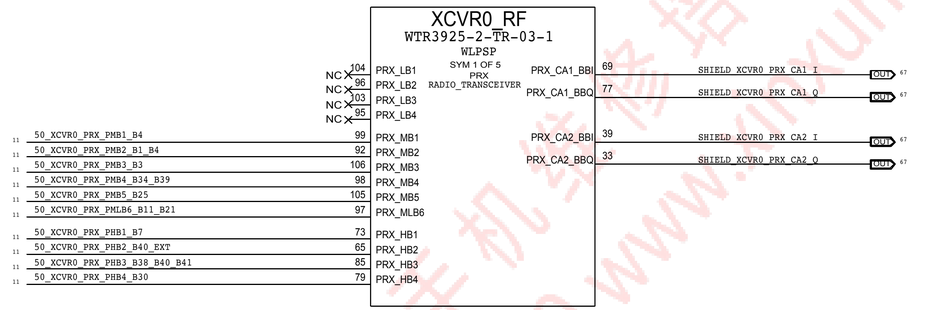

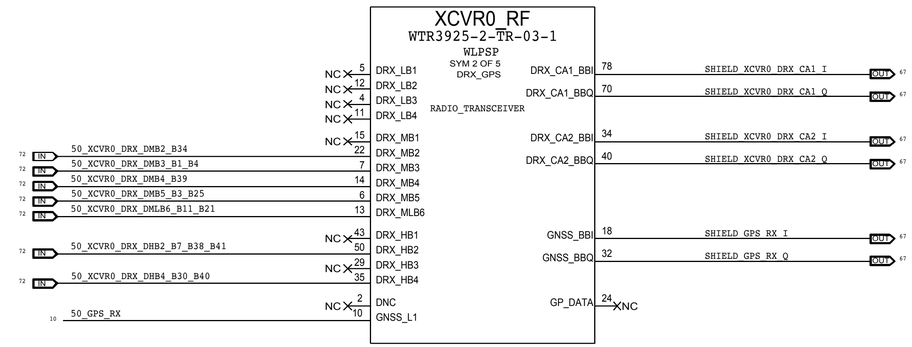

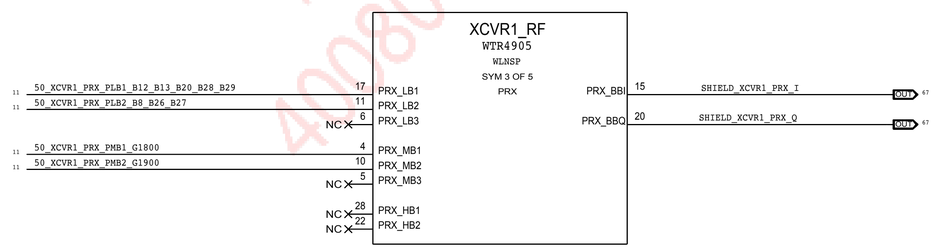

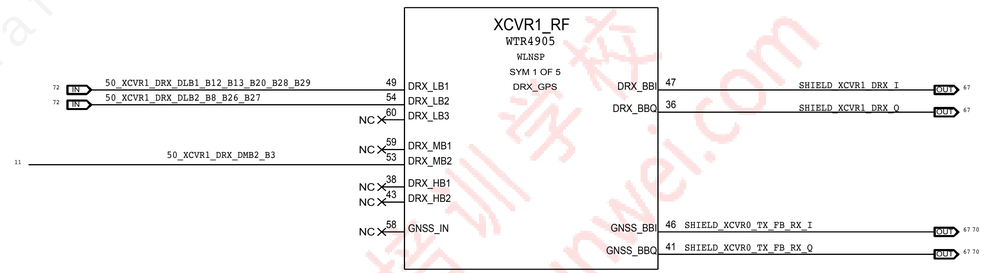

GPS FILTER

PLACE NEAR U_WTR

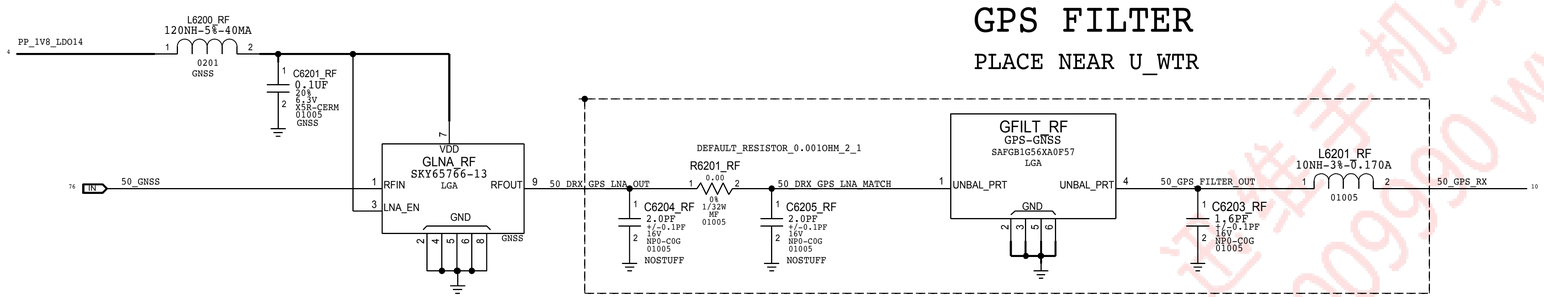

CONFIDENTIAL AND PROPRIETARY APPLE SYSTEM DESIGN. FOR REFERENCE PURPOSE ONLY - NOT A CHANGE REQUEST

PAGE TITLE	spare
DRAWING NUMBER	051-00419
SIZE	D
REVISION	8.0.0
BRANCH	
PAGE	6 OF 53
SHEET	6 OF 81

迅维手机维修培训学校 4008009990 www.xinxunwei.com
www.chinafix.com

PRIMARY & DIVERSITY RECEIVE MATCHING

DC BLOCKING CAP VALUES CANNOT BE MORE THAN 33PF

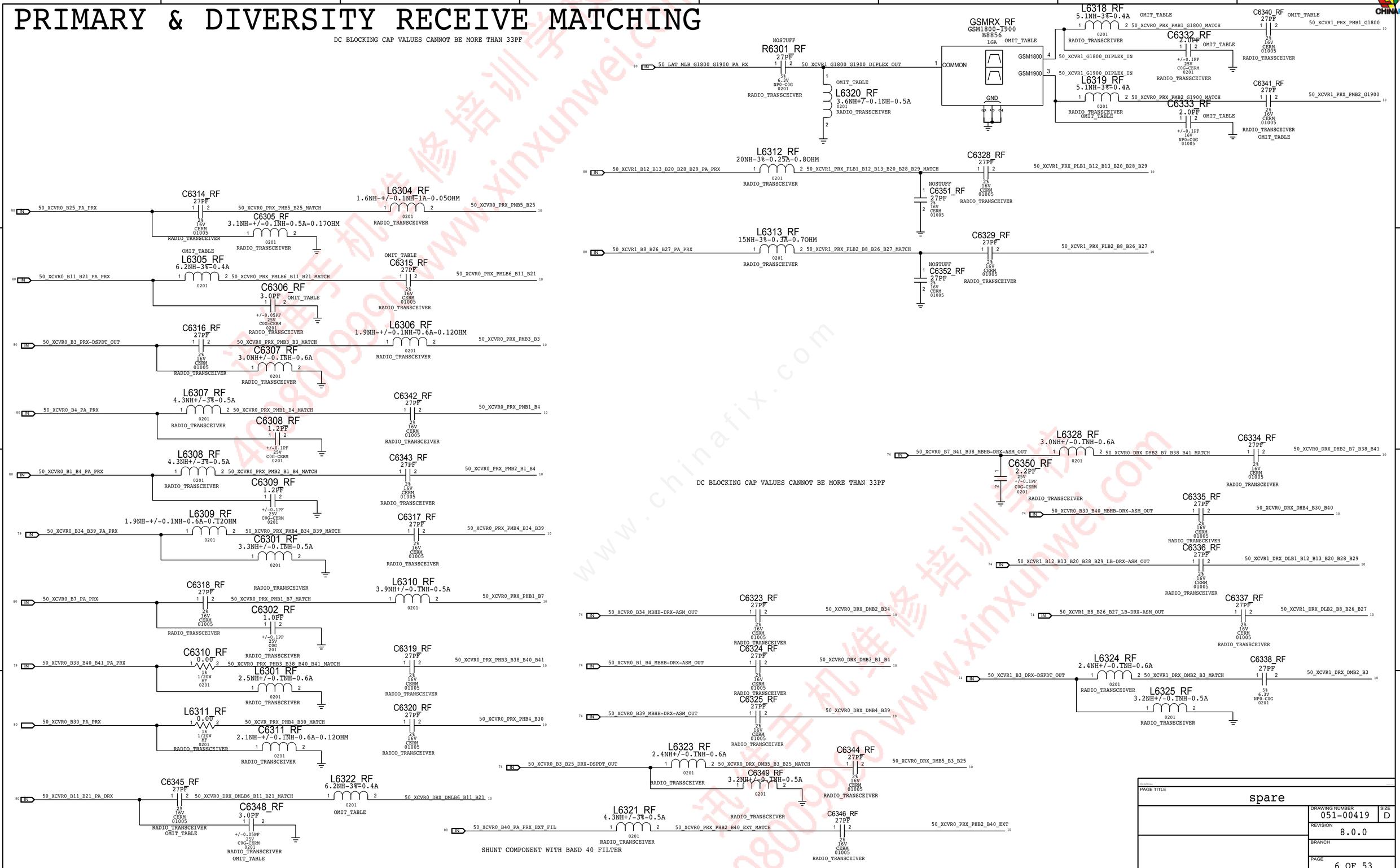

CONFIDENTIAL AND PROPRIETARY APPLE SYSTEM DESIGN. FOR REFERENCE PURPOSE ONLY - NOT A CHANGE REQUEST

PAGE TITLE	spare
DRAWING NUMBER	051-00419
SIZE	D
REVISION	8.0.0
BRANCH	
PAGE	6 OF 53
SHEET	6 OF 81

www.chinafix.com
4008009990 www.xinxunwei.com
讯维手机维修培训学校

LOWER ANTENNA AND COUPLER

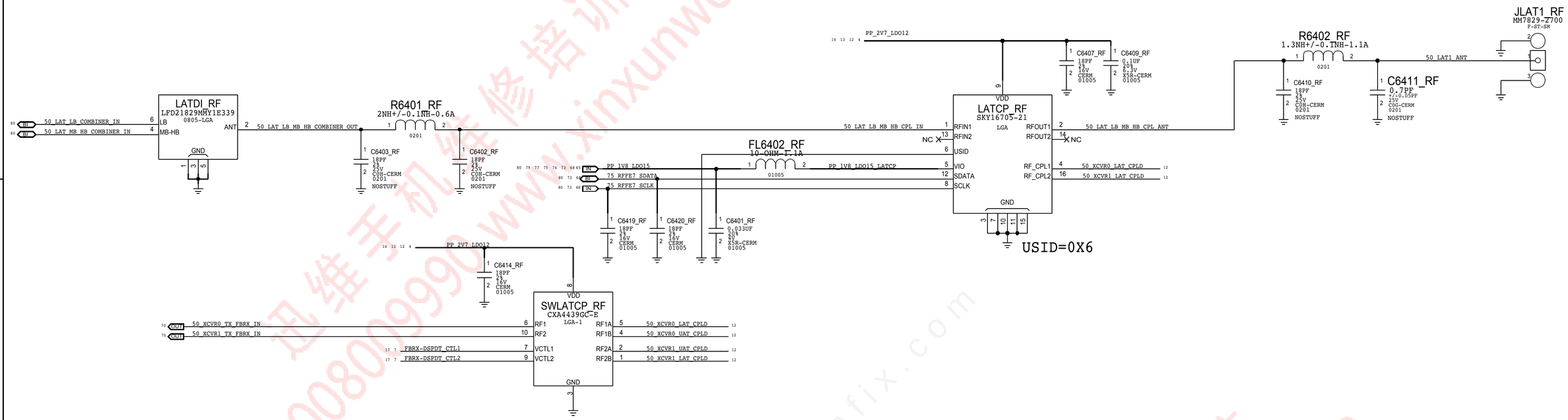

UPPER ANTENNA COUPLER

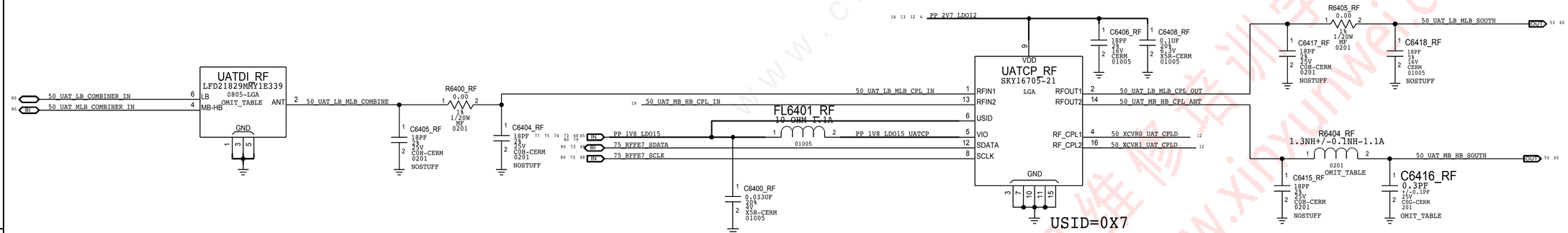

PAGE TITLE	spare
DRAWING NUMBER	051-00419
SIZE	D
REVISION	8.0.0
BRANCH	
PAGE	6 OF 53
SHEET	6 OF 81

迅维手机维修培训学校 www.xinxunwei.com 4008009990 www.chinafix.com

DIVERSITY RECEIVE

LB DRX ASM

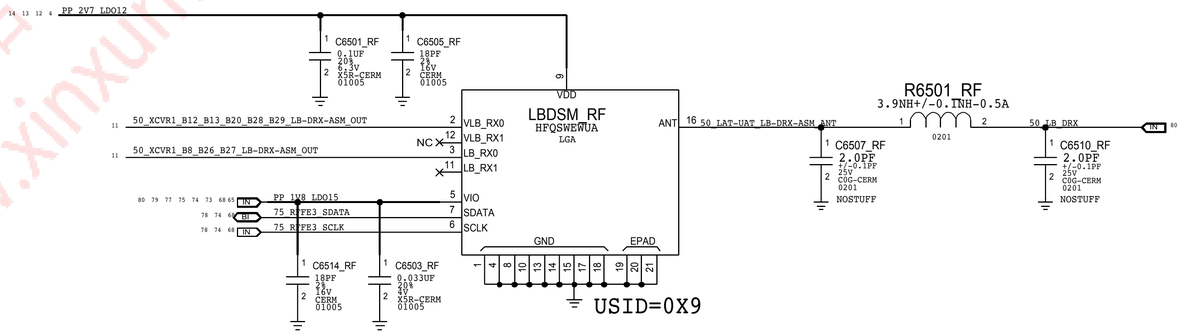

MB HB DRX ASM

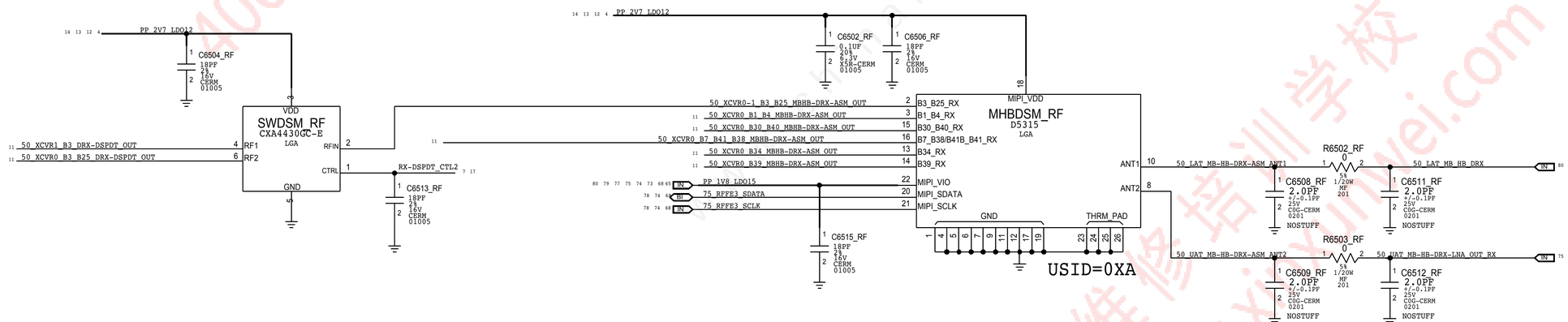

SYNC_DATE=04/17/2015	
PAGE TITLE	spare
DRAWING NUMBER	051-00419
SIZE	D
REVISION	8.0.0
BRANCH	
PAGE	6 OF 53
SHEET	6 OF 81

迅维手机维修培训学校 4008009990 www.xinxunwei.com

DIVERSITY RECEIVE LNAS

LB DRX LNA

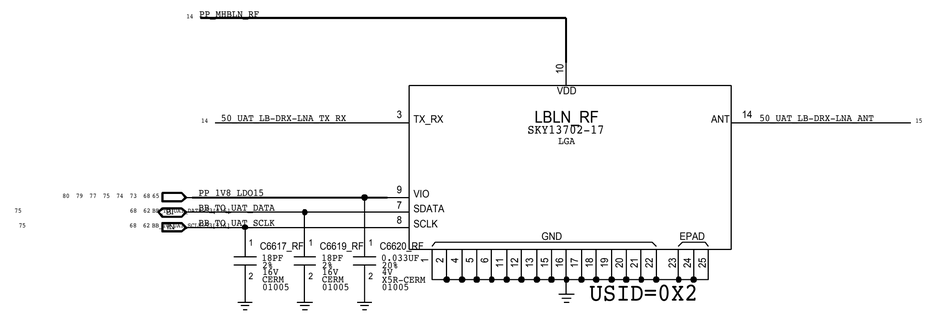

MB/HB DRX LNA

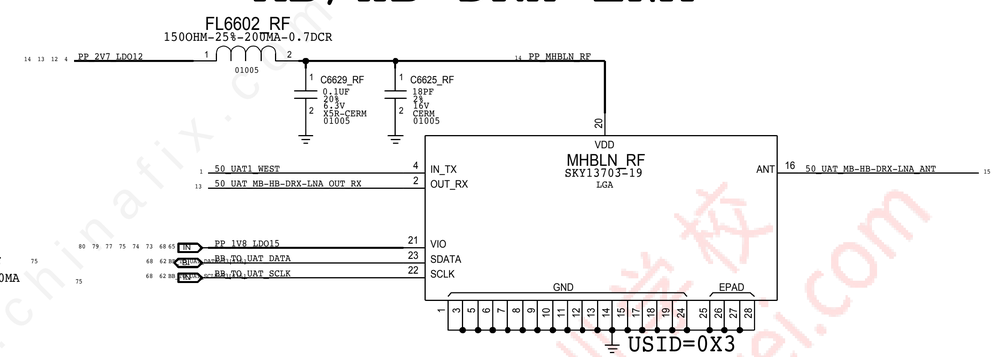

MLB DRX LNA

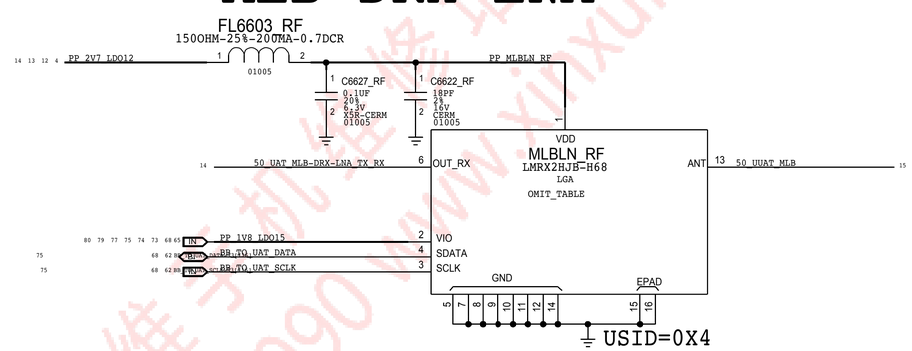

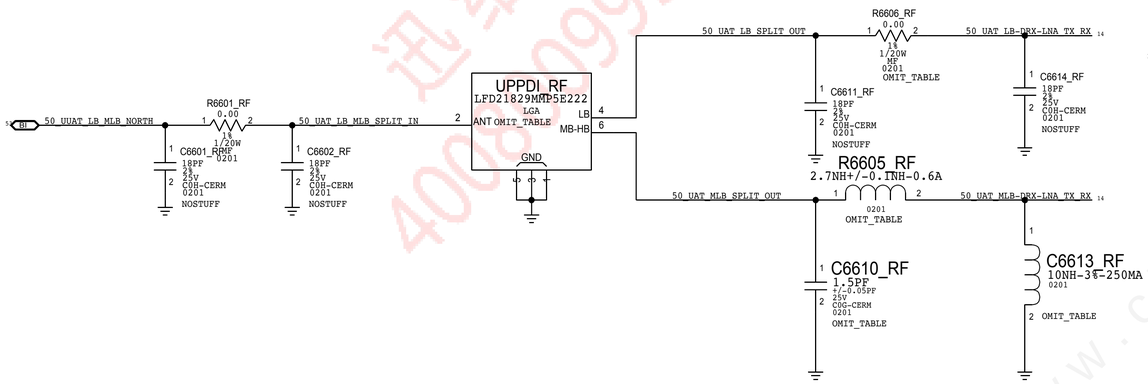

PAGE TITLE	spare
DRAWING NUMBER	051-00419
SIZE	D
REVISION	8.0.0
BRANCH	
PAGE	6 OF 53
SHEET	6 OF 81

迅维手机维修培训学校 4008009990 www.xinxunwei.com
www.chinafix.com

UPPER ANTENNA FEEDS

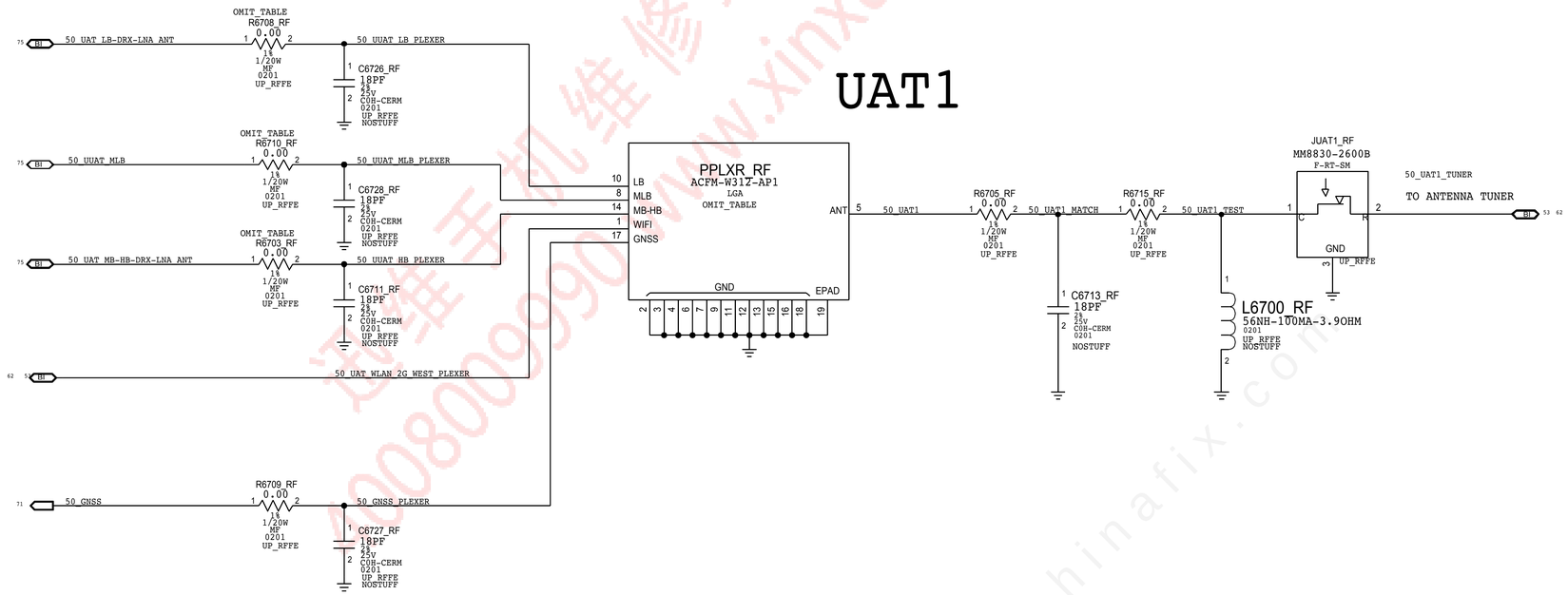

PAGE TITLE	spare
DRAWING NUMBER	051-00419
SIZE	D
REVISION	8.0.0
BRANCH	
PAGE	6 OF 53
SHEET	6 OF 81

迅维手机维修培训学校 4008009990 www.xinxunwei.com
www.chinafix.com

PMU: ET MODULATOR

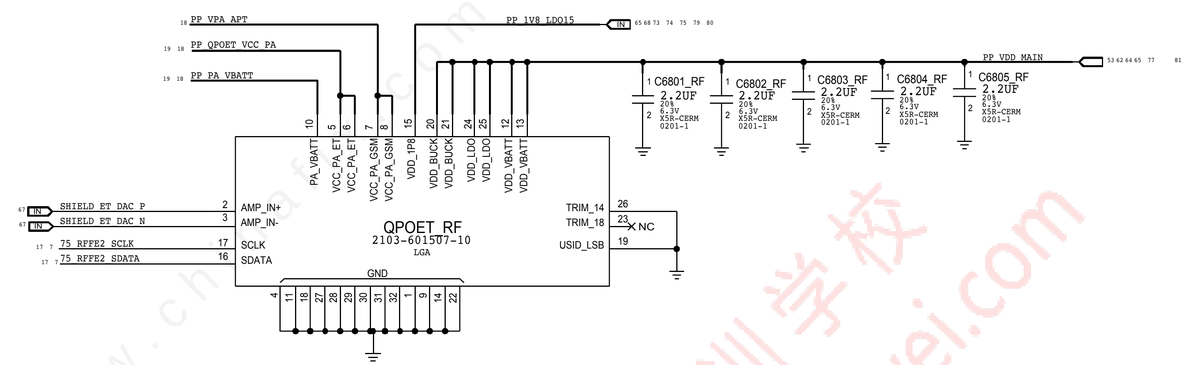

DESENSE CAPS

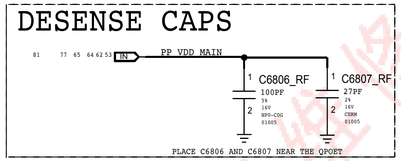

CONFIDENTIAL AND PROPRIETARY APPLE SYSTEM DESIGN. FOR REFERENCE PURPOSE ONLY - NOT A CHANGE REQUEST

PAGE TITLE	spare
DRAWING NUMBER	051-00419
SIZE	D
REVISION	8.0.0
BRANCH	
PAGE	6 OF 53
SHEET	6 OF 81

迅维手机维修培训学校 www.xinxunwei.com 4008009990

MLB TEST POINTS

BASEBAND

PP7000_RF
P2MM-NSM
SM
PP 1 75_RFFE1_SDATA 7 9
OMIT

PP6952_RF
P2MM-NSM
SM
PP 1 75_RFFE1_SCLK 7 9
OMIT

PP6943_RF
P2MM-NSM
SM
PP 1 75_RFFE2_SDATA 7 16
OMIT

PP6944_RF
P2MM-NSM
SM
PP 1 75_RFFE2_SCLK 7 16
OMIT

PP6939_RF
P2MM-NSM
SM
PP 1 75_RFFE3_SDATA 7 13
OMIT

PP6940_RF
P2MM-NSM
SM
PP 1 75_RFFE3_SCLK 7 13
OMIT

PP6941_RF
P2MM-NSM
SM
PP 1 75_RFFE4_SDATA 7 9
OMIT

PP6942_RF
P2MM-NSM
SM
PP 1 75_RFFE4_SCLK 7 9
OMIT

PP6903_RF
P2MM-NSM
SM
PP 1 BB_TO_LAT_ANT_DATA 1 7
OMIT

PP6904_RF
P2MM-NSM
SM
PP 1 BB_TO_LAT_ANT_SCLK 1 7
OMIT

PP6935_RF
P2MM-NSM
SM
PP 1 75_RFFE6_SCLK 7 18 19
OMIT

PP6936_RF
P2MM-NSM
SM
PP 1 75_RFFE6_SDATA 7 18 19
OMIT

PP6906_RF
P2MM-NSM
SM
PP 1 SWD_AP_TO_BB_CLK_BUFFER 6
OMIT

PP6907_RF
P2MM-NSM
SM
PP 1 PMU_TO_BB_USB_VBUS_DETECT 1 3 20
OMIT

PP6908_RF
P2MM-NSM
SM
PP 1 NFC_TO_BB_CLK_REQ 1 3
OMIT

PP6909_RF
P2MM-NSM
SM
PP 1 SIM1_REMOVAL_ALARM 3 7
OMIT

PP6911_RF
P2MM-NSM
SM
PP 1 50_MDM_PCIE_CLK 3 6
OMIT

PP6912_RF
P2MM-NSM
SM
PP 1 XO_OUT_D0_EN 3 6
OMIT

PP6913_RF
P2MM-NSM
SM
PP 1 BB_TO_NFC_CLK 1 3
OMIT

PP6914_RF
P2MM-NSM
SM
PP 1 SHIELD_SLEEP_CLK_32K 3 6
OMIT

PP6933_RF
P2MM-NSM
SM
PP 1 BB_TO_STROBE_DRIVER_GSM_BURST_IND
OMIT

PP6917_RF
P2MM-NSM
SM
PP 1 UART_BB_TO_WLAN_COEX 1 7 20
OMIT

PP6918_RF
P2MM-NSM
SM
PP 1 UART_WLAN_TO_BB_COEX 1 7 20
OMIT

PP6919_RF
P2MM-NSM
SM
PP 1 BB_JTAG_RST_L 6 20
OMIT

PP6920_RF
P2MM-NSM
SM
PP 1 FBRX-DSPDT_CTL1 7 12
OMIT

PP6921_RF
P2MM-NSM
SM
PP 1 FBRX-DSPDT_CTL2 7 12
OMIT

PP6923_RF
P2MM-NSM
SM
PP 1 BB_TO_PMU_PCIE_HOST_WAKE_L 1 7
OMIT

PP6924_RF
P2MM-NSM
SM
PP 1 SPMI_CLK 3 6
OMIT

PP6925_RF
P2MM-NSM
SM
PP 1 SPMI_DATA 3 6
OMIT

PP6926_RF
P2MM-NSM
SM
PP 1 UART_BB_TO_AOP_RXD 1 7
OMIT

PP6929_RF
P2MM-NSM
SM
PP 1 AP_TO_BB_TIME_MARK 1 7
OMIT

PP6930_RF
P2MM-NSM
SM
PP 1 BB_TO_AP_RESET_DETECT_L 1 7
OMIT

PP6931_RF
P2MM-NSM
SM
PP 1 AP_TO_BB_COREDUMP 1 7
OMIT

PP6938_RF
P2MM-NSM
SM
PP 1 RX-DSPDT_CTL2 7 13
OMIT

PCIE

PP6915_RF
P2MM-NSM
SM
PP 1 90_PCIE_AP_TO_BB_REFCLK_P 1 6
OMIT

PP6916_RF
P2MM-NSM
SM
PP 1 90_PCIE_AP_TO_BB_REFCLK_N 1 6
OMIT

PCIE GND

PP6970_RF
P2MM-NSM
SM
PP 1
OMIT

PP6971_RF
P2MM-NSM
SM
PP 1
OMIT

BBPMU

PP6945_RF
P2MM-NSM
SM
PP 1 PMIC_RESOUT_L 3 6
OMIT

PP6905_RF
P2MM-NSM
SM
PP 1 AP_TO_BBPMU_RADIO_ON_L 1 3 20
OMIT

PP6900_RF
P2MM-NSM
SM
PP 1 PMU_TO_BBPMU_RESET_L 1 3
OMIT

SIM

PP6953_RF
P2MM-NSM
SM
PP 1 SIM1_IO 7 20
OMIT

PP6969_RF
P2MM-NSM
SM
PP 1 SIM1_DETECT 7 20
OMIT

PP6972_RF
P2MM-NSM
SM
PP 1 SIM1_RST 7 20
OMIT

PP6973_RF
P2MM-NSM
SM
PP 1 SIM1_CLK 7 20
OMIT

PP6974_RF
P2MM-NSM
SM
PP 1 90_USB_BB_DATA_P 1 6 20
OMIT

PP6977_RF
P2MM-NSM
SM
PP 1 90_USB_BB_DATA_N 1 6 20
OMIT

BOOT CONFIG

DEFAULT FAST_BOOT[2:0]
USB = 0X2

20 7 6 5 4 PP_1V8_LDO6

NOSTUFF
R6921_RF
10K
1%
1/32W
MF
01005
RADIO_DEBUG

R6922_RF
10K
1%
1/32W
MF
01005
RADIO_DEBUG

7 FAST_BOOT_SELECT1
7 FAST_BOOT_SELECT0

ICEFALL

PP6978_RF
P2MM-NSM
SM
PP 1 AP_TO_ICEFALL_FW_DWLD_REQ 1 20
OMIT

PP6979_RF
P2MM-NSM
SM
PP 1 SIM1_SWP 20
OMIT

PP6980_RF
P2MM-NSM
SM
PP 1 SE2_SWP 20
OMIT

PP6981_RF
P2MM-NSM
SM
PP 1 ICEFALL_LDO_ENABLE 1 20
OMIT

PP7500_RF
P2MM-NSM
SM
PP 1 SE2_READY 1 20
OMIT

PP7501_RF
P2MM-NSM
SM
PP 1 NFC_SWP_MUX 1 20
OMIT

PP7502_RF
P2MM-NSM
SM
PP 1 SE2_PWR_REQ 1 20
OMIT

PAGE TITLE	spare
DRAWING NUMBER	051-00419
SIZE	D
REVISION	8.0.0
BRANCH	
PAGE	6 OF 53
SHEET	6 OF 81

迅维手机维修培训学校 www.xinxunwei.com 4008009990
www.chinafix.com

TDD TRANSMIT

2G PA

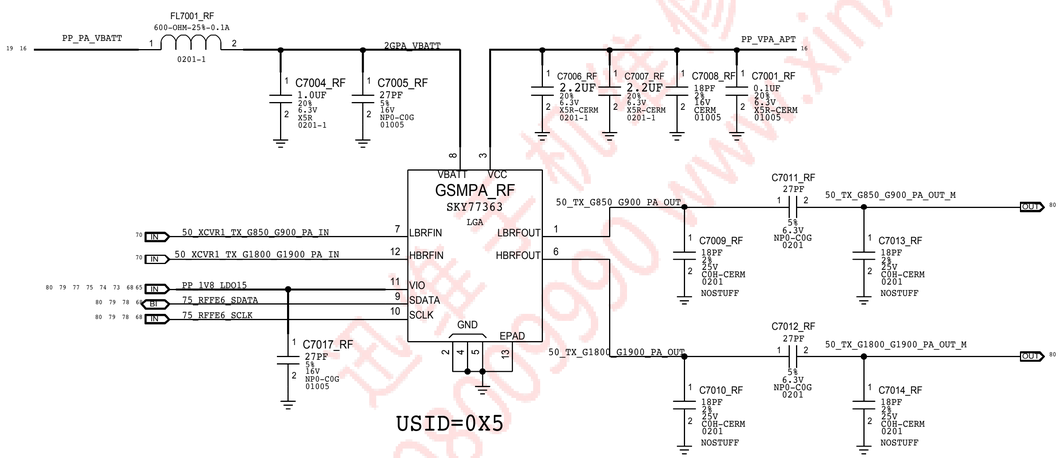

MB HB TDD PA

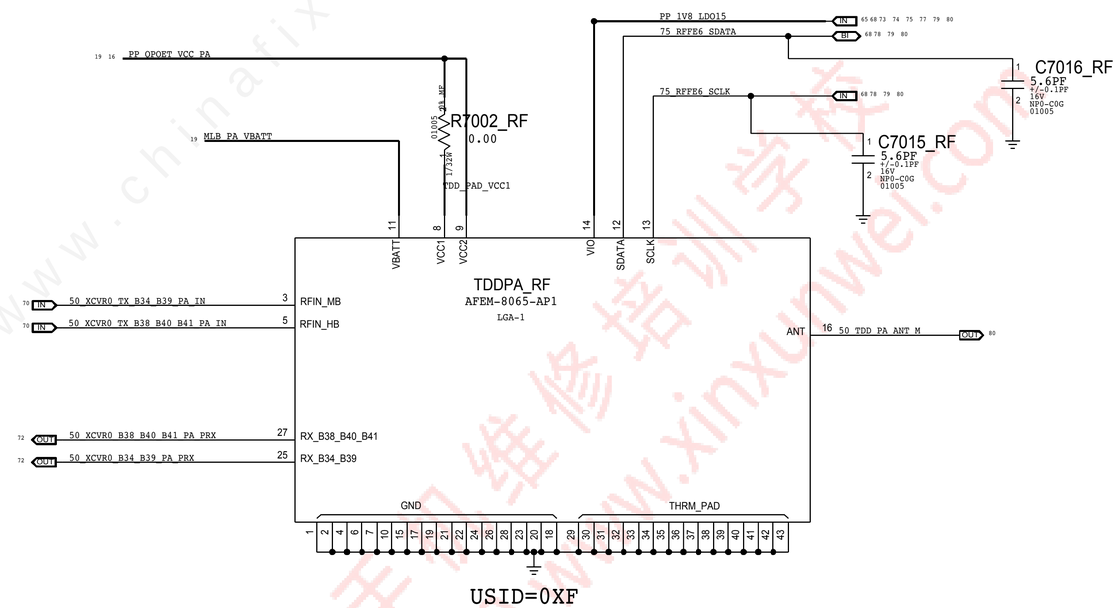

PAGE TITLE	spare
DRAWING NUMBER	051-00419
SIZE	D
REVISION	8.0.0
BRANCH	
PAGE	6 OF 53
SHEET	6 OF 81

www.chinafix.com
迅维手机维修培训学校 4008009990 www.xinxunwei.com

FDD TRANSMIT

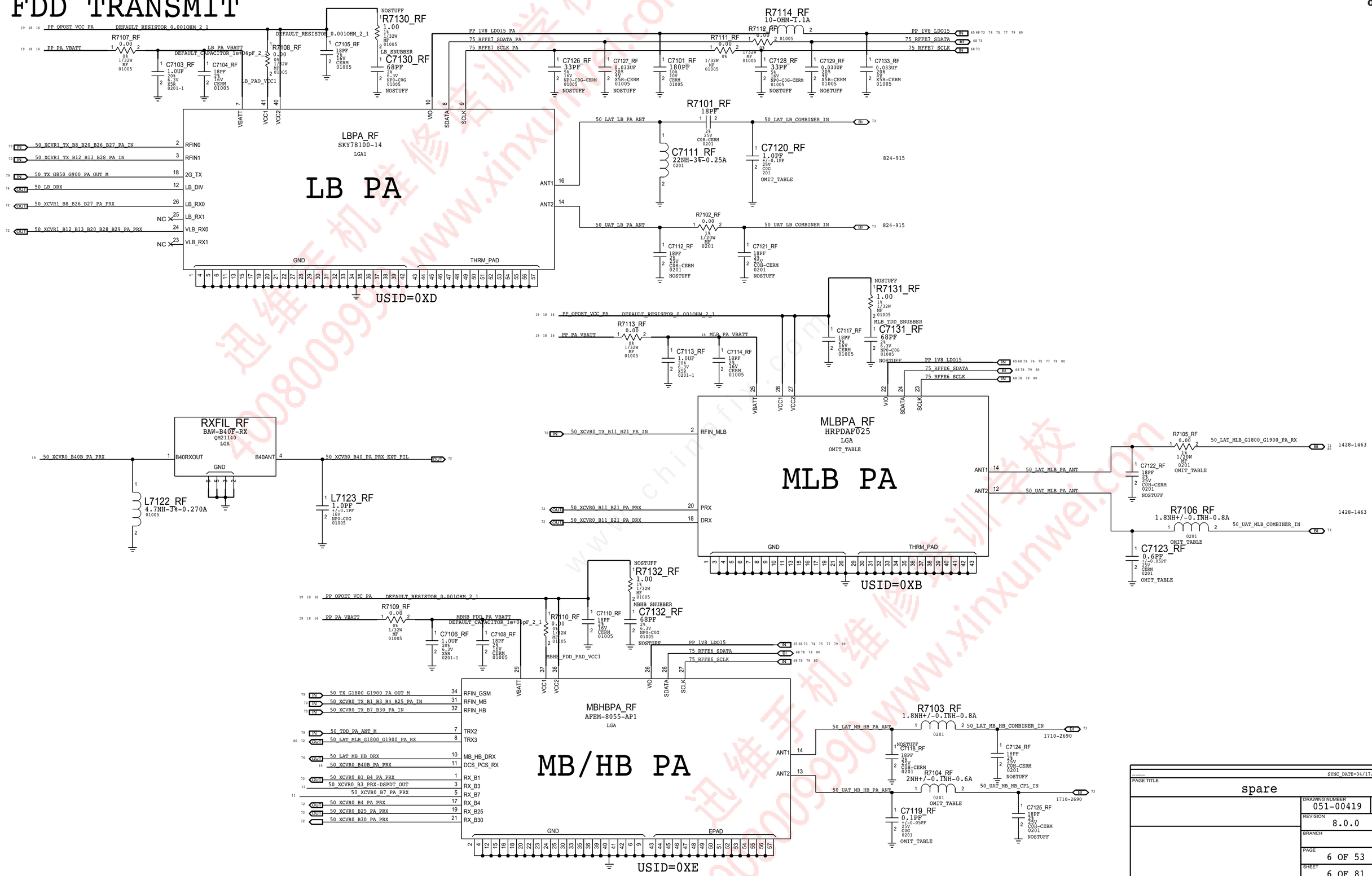

PAGE TITLE	spare
DRAWING NUMBER	051-00419
SIZE	D
REVISION	8.0.0
BRANCH	
PAGE	6 OF 53
SHEET	6 OF 81
SYNC_DATE	04/17/2015

迅维手机维修培训学校 www.xinxunwei.com 4008009990

ICEFALL

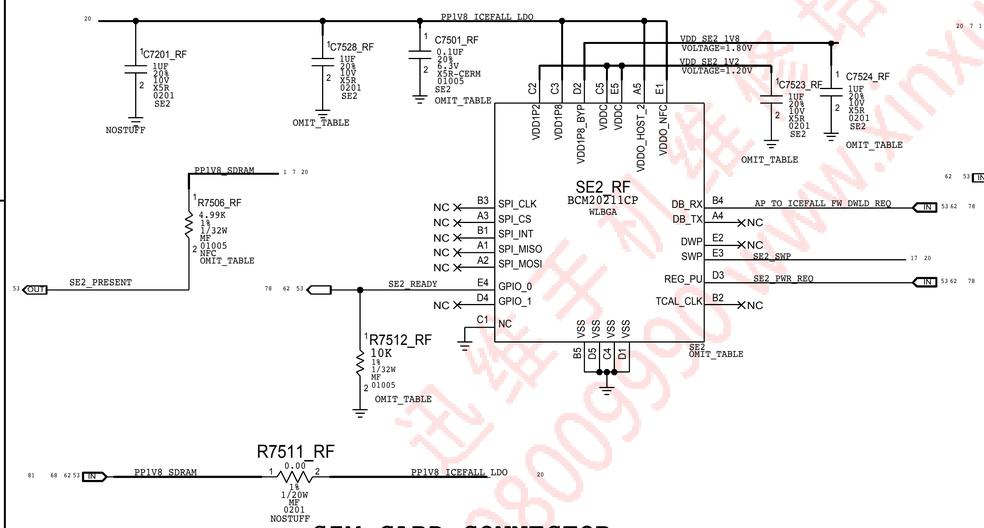

SWP MUX

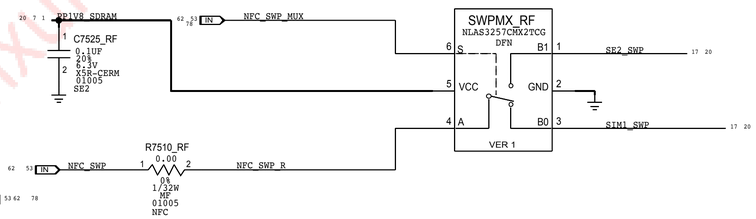

ICEFALL LDO

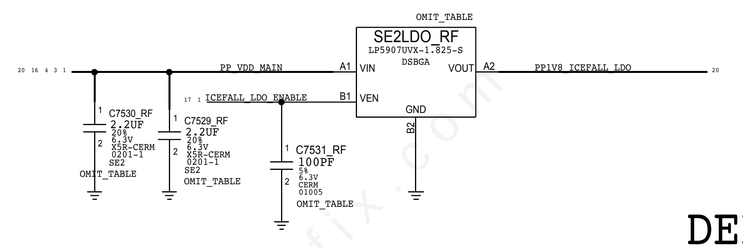

SIM CARD CONNECTOR

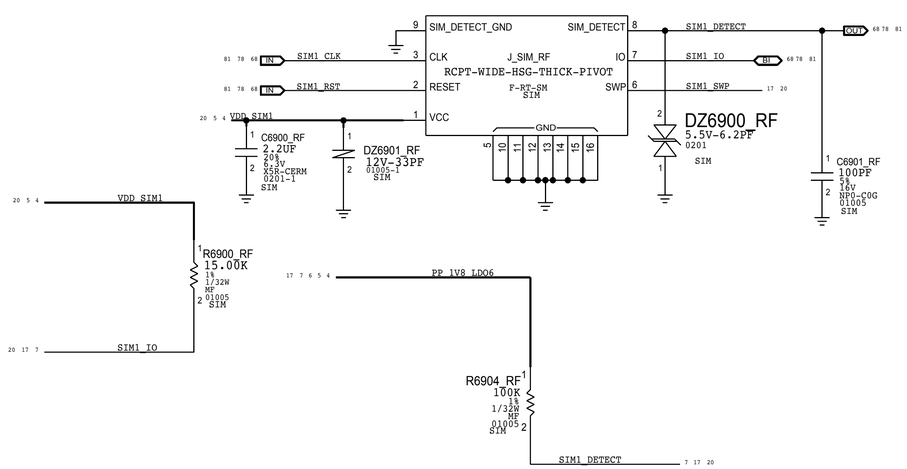

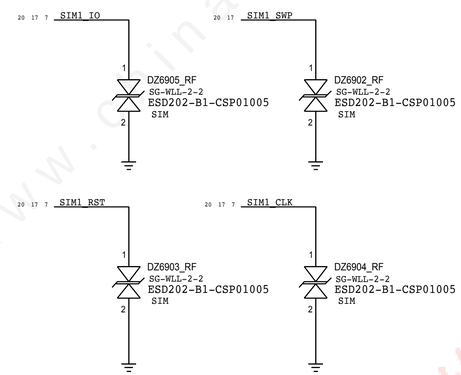

DEBUG CONNECTOR

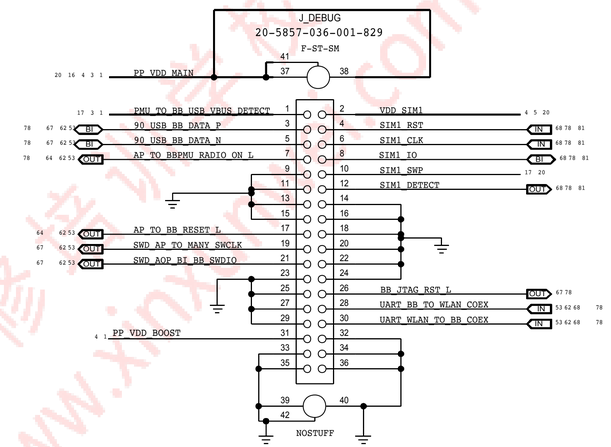

PAGE TITLE	spare
DRAWING NUMBER	051-00419
SIZE	D
REVISION	8.0.0
BRANCH	
PAGE	6 OF 53
SHEET	6 OF 81

迅维手机维修培训学校 www.xinxunwei.com 4008009990